NORO

KNITTING MAGAZINE
ISSUE 18

LOVE AT FIRST SIGHT

30 LAID-BACK KNITS FOR RELAXED LIVING

IT'S A WRAP
ONE SHAWL, EVERY YARN

BEAT THE HEAT
SOFT SILHOUETTES IN SUMMERY SHADES

HEART SCARF
PAGE 96

U.S. $9.99
CAN $10.99
EUR €7.99
GBP £5.99

$9.99US $10.99CAN 11>
0 74470 01784 4
Display until 5/22/21

LYKKE®

MAKE HAPPY

NEW! Blush Birchwood Interchangeable Circular Knitting Needle Sets are available in two finishes: Fuchsia Fabric and Magenta Textured Basketweave Effect.
Each set includes: needle tips in assorted sizes, memory-free hot pink swivel cords in three different lengths, two connectors, four keys and eight stoppers.

NEW! Hand-crafted Swifts and Jumbo Ball Winders available in two finishes: sustainably-sourced Mango Wood and Indian Sheesham Rosewood.

NEW! Mango Wood 36-inch Jumbo Fixed Circular Needles available in 15, 19, 25, 30 and 35 millimeters.

knittingfever.com/store-locator

SPRING
SUMMER
2021

ORO

"KNIT ON WITH CONFIDENCE AND HOPE THROUGH ALL CRISES."

These wise words from the late Elizabeth Zimmermann, the pioneer who revolutionized modern knitting, are more apt than ever before. As we've all experienced some form of isolation in the past year, and in many cases continue to do so, knitting has kept us creative and productive, strong and connected. For many of us the repetitive motion of stitching has been soothing, calming and stress reducing.

We hope this issue inspires you to take up a new project, one that brings immense joy, while we wait for these trying times to be behind us.

—THE EDITORS

2021 Colors of the Year

ULTIMATE GRAY & ILLUMINATING

Pantone chose these two hues for 2021. "Practical and rock solid but at the same time warming and optimistic, this is a color combination that gives us resilience and hope."
—Leatrice Eiseman, Exec. Director, Pantone Color Institute

The **SUMMER CITRUS SHAWL**, in pearl & chartreuse shades of Sonata • Page 22

Explore the World of

NORO

Exceptional Yarns • Glorious Colors
Inspired Designs

Expand your knitting library with stunning collections that make the most of NORO's breathtaking colorways

AVAILABLE AT LOCAL YARN STORES, LOCAL BOOKSTORES, AND ONLINE WHEREVER BOOKS ARE SOLD.

NORO

KNITTING MAGAZINE

Editor in Chief
And Technical Director
CARLA SCOTT

Creative Director
DIANE LAMPHRON

Managing Editor
LESLIE BARBER

PATTERNS EDITORS
ROSEMARY DRYSDALE
RENEE LORION
MARI LYNN PATRICK

EDITORIAL INTERN
JUANA MELENDEZ

ADVERTISING
To discuss advertising opportunities, contact Jessica Denecke at jessica@knittingfever.com

SOHO PUBLISHING COMPANY
President ART JOINNIDES
Chairman JAY STEIN
Chief Executive Officer CARRIE KILMER
Publisher DAVID JOINNIDES
Controller ELAINE MOWBRAY

HOW TO REACH US
GENERAL INQUIRIES
www.noromagazine.com
PATTERN INQUIRIES
Corrections are posted at
www.noromagazine.com

Manufactured and printed in the United States of America.
Vol.10 No. 1 (February 2021).
Noro Magazine is published two times a year.
Published by Soho Publishing, LLC,
104 West 27th Street, 3rd floor.
New York, NY 10001.

Copyright © 2021 by Knitting Fever, Inc. (KFI), P.O. Box 336, 315 Bayview Avenue, Amityville, NY 11701. All rights reserved. No part of this magazine may be copied or reproduced by any means without written permission of the publisher. The foregoing does notapply to limited copies (up to 3) for purely personal, non-commercial, non-distributive uses such as enlargement or marking.

IMPORTANT NOTICE:
Single copies $9.99 in U.S.A., $10.99* in Canada.
*Recommended price.

STAY CONNECTED WITH NORO

NORO

ISSUE 18

FEATURES

4 UNWRAPPING A WORLD OF COLOR
Meet Mr. Noro, the man behind the brand, and learn how his unique yarns are made.

8 TWISTED SISTERS
Introducing Enka and Kakigōri, our two new cotton & silk blends.

9 NATURALLY NEUTRAL
New season's offerings from Ella Rae, Jody Long, Mirasol, and more.

57 PATTERN INSTRUCTIONS

89 STOCKISTS

PROJECTS

10 THE EASY-PEASY PONCHO
New to knitting? This is the pefect beginner project.

12 IT'S A SHAWL THING
Each of our exquiste wraps features a new technique to try.

24 ONE SHAWL, SO MANY CHOICES!
We'll show you how to make our shawl in all of the Noro spring yarns.

28 DREAM A LITTLE DREAM
Savor downtime with these modern crocheted blankets.

32 COMFORT ZONE
Loose layers and soft yarns are the perfect combo for the warmer months.

38 SUMMER SOLSTICE
It's all about relaxed silhouettes and light yarns paired with textural stitches.

50 OPEN SEASON
Crocheted poncho tops and shawls perfect for the lazy, hazy days of summer.

54 SOLO PERFORMANCE
Best-selling Silk Garden Sock Solo packs a punch with its tonal hues.

ON THE COVER
Fall in love with the Heart Scarf, knit in two shades of Kureyon.
Page 96.

Photograph by Jack Deutsch. Styled by Jessica Saal. Hair and makeup styled by Agata Helena.

Crocheted SPRING WOODLANDS SHAWL
Page 50

OTOGIBANASHI, which translates to fairytale in English, is how Mr. Noro describes his life. He constantly marvels that a small company founded by a country boy can sell his original products all over the world.

THE NORO STORY

UNWRAPPING A WORLD OF COLOR

EACH BALL OF NORO YARN IS A GIFT JUST WAITING TO BE OPENED, TREASURED AS A WORK OF ART ON ITS OWN AND FOR WHAT IT WILL ULTIMATELY BECOME.

Inspiration is found everywhere in Noro yarns. Take, for example, the colors. Examine a yarn like perennial favorite Kureyon and you'll see colorways with the vivid golds and greens of a sunflower patch, muted neutral palettes that mimic the infinite hues of bark, and the striking combinations of crimson, chartreuse and orange that one would see in a meadow of wildflowers. Indeed, Noro yarns are known for their vivid hues and unique combinations of colors found in the natural world think of the red leaves of maple trees or the cerulean blue of the sky. These colors also tap into the multiplicity of shades found around us. Leaves may appear as one shade of green from afar, says Mr. Noro, "but in reality they come in countless variations of green. By mixing colors, we can create a more natural feel reminiscent of oceans, mountains, flowers and trees." His insistence on maintaining the integrity of the dye process—taking sufficient time to apply color is crucial—creates these rich, complex hues while reducing the process's ecological impact.

Mr. Noro's reliance on natural fibers is another link to the natural world. Chockfull of wool, silk, mohair and other

MAKING NORO YARN
1 Unlike with most yarn production, the fleece is dyed prior to spinning. **2** Once dyed, the different colored fibers are lined up to be fed into the carding machine. **3** The raw fiber is fed onto the drums of the carding machine which disentangles, cleans and mixes the fibers. **4** After spinning, the yarns are twisted and wound onto bobbins.

"I was born and grew up in a place where more great unspoiled nature is left than anywhere else in Japan, so the world of nature is always close. Whether I am aware of it or not, **I am inspired by nature in so many ways.**"

fibers drawn from animals and plants, Noro yarns have a visceral connection to the world around us. "Natural fibers have features that synthetic fibers cannot mimic, and we want these to show through as much as possible in our yarns," says Mr. Noro. Think of wool's breathability and the luster of mohair. The company's embrace of natural fibers is enhanced by the careful way that these fibers are gathered.

All animal fibers used to create Noro yarns come from certified organic farms, including producers in Australia, the Falkland Islands and South Africa—the best the world has to offer. Mr. Noro himself maintains the integrity of the production process, visiting farms, checking the type of equipment used to spin the fiber and monitoring the dyeing process.

One of the most prominent qualities of Noro yarn is its handspun, loosely processed quality. This too is an essential part of Noro's vision of creating yarns that remain true to their natural heritage. Keeping processing to a minimum and eschewing the use of harsh chemical treatments is critical to this vision. Friction created by agitation and heat during processing can weaken natural fibers; by shortening this process, Noro reduces the damage done to fibers and to the environment. Minimizing the amount of machine handling also preserves the original qualities of the fibers. The company uses only one roller on the carding machine instead of the usual three, uses a shorter bed and gently handfeeds fiber into the carder. The yarns receive less twist in the spinning process, which creates the variances in thickness. The variations and slight unevenness in the yarns' texture are not mistakes but rather a deliberate choice so that knitters may feel closer to nature. As Mr. Noro observes, "When we make wool yarn, we use various lengths and thicknesses of the wool fiber. We want to reproduce the qualities of the sheep itself in our yarn." Indeed, this willingness to embrace the imperfections and variations is a hallmark of Noro yarns. Eisaku Noro sees this as a nod to Japanese cultural: "From ancient times, Japanese have accepted, enjoyed and been charmed by the lack of uniformity and, occasionally, the coarseness of nature. It may be the base of us as human beings and not only the basic philosophy for Noro yarns."

You can see a fresh reminder of the strong ties between Noro and the world of nature with the company's reinvented packaging. Says Jeffrey Denecke, chief operating officer of Noro's U.S. distributor, Knitting Fever: "We wanted to rebrand the yarns in a way that highlights Noro's story. Mr. Noro was a pioneer who was way ahead of his time. When he started the company in the 1980s, he was already concerned about not overprocessing the fibers so they would keep their natural state." Denecke cites Noro's reliance on using trusted suppliers, staying intimately involved by handpicking the fibers, and carefully training his staff in his unique methods of spinning yarn and creating colorways. "The yarn," he notes, "is truly a work of art, not 'commercial' like many other products on the market today." As a result, the company's rebranding effort is meant to remind consumers of the link between Noro yarns and the natural world.

One change you'll notice is the hang tag. A switch to an ecru background lightens the label while retaining the authentic Noro logo and overall feel. The hang tags do, of course, include all the usual information—yarn name, content, yardage and other specifications—but also feature phrases that help remind knitters and crocheters of Noro's underlying philosophy, a kind of talking point for Eisaku Noro and his vision.

Another change is the beautiful black-and-white ribbon encircling the yarn. The ribbon features Japanese text, translating to "World of Nature," and is similar to a seal of Noro authenticity that needs to be broken to unwrap the yarn. By wrapping each ball of yarn "like a gift to be opened," the ribbon is a nod to the importance of presentation and wrapping in Japanese culture. In Japan, how a gift is presented is often as important as the gift itself. Carefully wrapping an item symbolizes its importance and transforms an everyday object into something special. ❖

FACT FILE

COMPANY FOUNDED 1980

NAMED FOR Eisaku Noro

LOCATION
Ichinomiya-shi city in the Aichi-ken Prefecture, Japan

FIRST YARN LAUNCHED
Qinpatora

OLDEST YARN STILL IN THE COLLECTION
Kureyon. This is also the most popular yarn ever.

PRODUCTION 40,000 kg/year

READING THE LABEL
The larger letters read NO-RO-EI-SAKU. The smaller letters, SHI-ZEN-NO-SE-KAI, meaning world of nature.

PLANNING COLORWAYS
1 The color design team works with Mr. Noro to create a range of colorways when each new yarn is launched. **2** Colors are laid out and the ratios of each are decided. **3** Once colors are selected, a small sample of each is produced and knit, then tweaking continues until Mr. Noro considers the combinations to be perfect. **4** After spinning, yarn is balled and labeled, then packed and shipped all over the world.

Velveteen Cotton by Ella Rae
Cotton (81%) and polyamide (19%); Chainette construction that's as soft as cotton wool and with the hint of a halo. Shown here in the purest of whites. (229yds/100g).

Usun by Mirasol
Organic cotton (92%) and polyamide (8%); A wonderfully soft and smooth cotton that gets its structure and strength, and its lightness of weight, from a clean chainette construction. Knits like a dream! (360yds/100g).

Katmandu Fingering by Queensland Collection
Wool (85%); silk (10%), cashmere (5%). A fingering weight rounds out the family of DK and Aran weights of this best-selling tweed. (425yds/100g).

Summer Solstice from Juniper Moon Farm
Linen (48%), cotton (24%), viscose (24%), polyester (4%); Linen lovers rejoice! This tweedy blend is both crisp and soft and sports a soft sheen. Washing will open it up. (295yds/100g).

Summer Delight by Jody Long
Organic cotton (90%) and cashmere (10%); Cashmere adds luxe and a little warmth to a robust organic cotton. With excellent yardage, this is a great summer staple. (273yds/100g).

NEEDLES AND HOOKS - LYKKE DRIFTWOOD. PHOTOGRAPH BY JACK DEUTSCH

SPRING / SUMMER 2021 • SPECIAL YARN PREVIEW

Naturally Neutral

INSPIRED BY SANDY BEACHES, DRIFTWOOD & ROCKY OUTCROPS

These soft, organic colors evoke memories of walking in nature, collecting shells and sand dollars, twigs and pine cones, stones and pebbles, and marveling at the myriad shades that exist in the natural world.❖

NEW THIS SEASON

NORO SPRING • SUMMER 2021

Twisted Sisters

Uniquely Noro, the newest yarns are all about entwining tonal plies to create movement of color

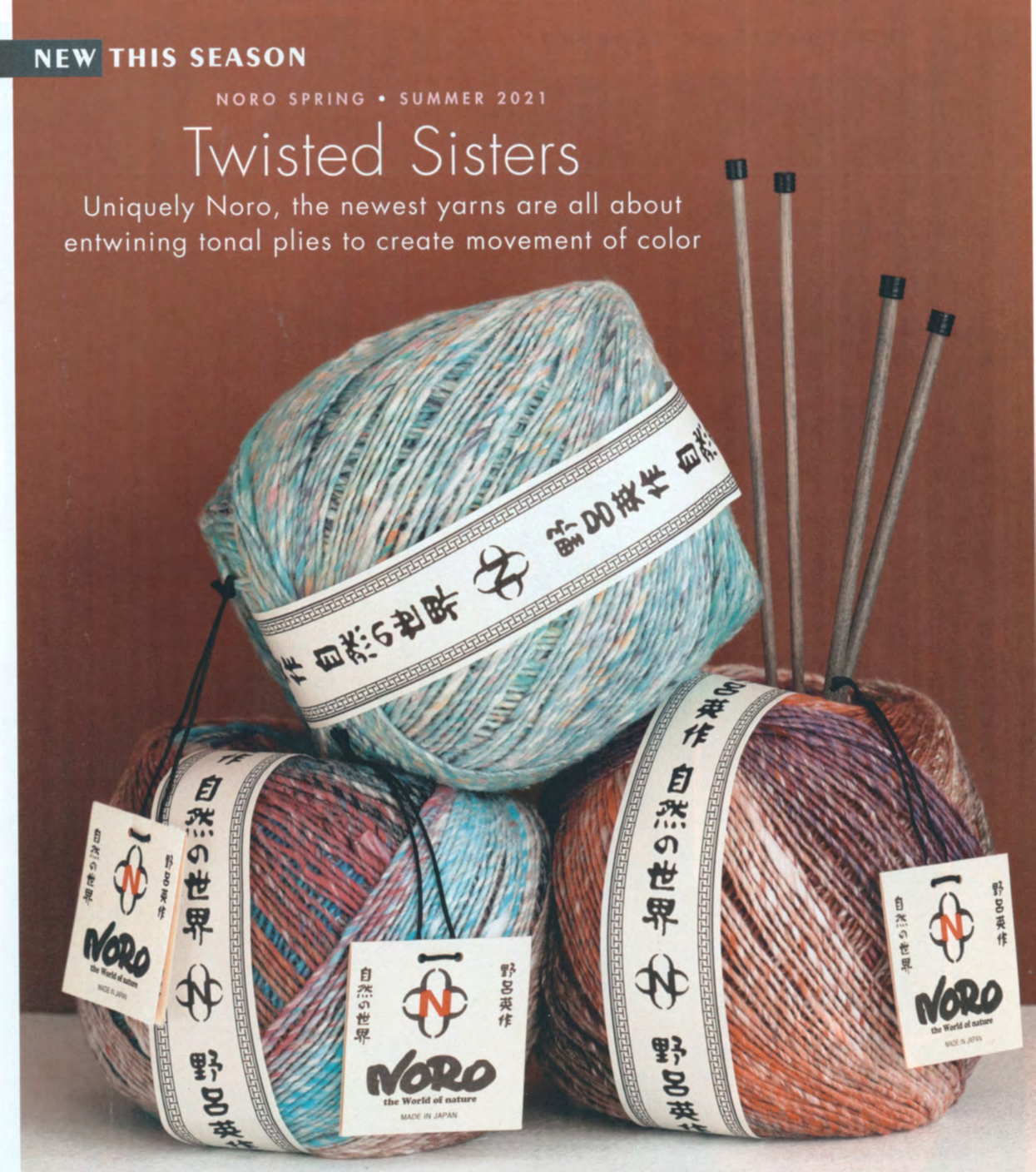

TOP: KAKIGŌRI combines the best qualities of cotton and silk into a lush, soft yarn that gets its unique coloring from two twisted plies. Shades tend toward a single color family, with specks of contrasting colors scattered throughout.

50% Cotton
30% Silk
10% Viscose
10% Polyamide
• 600m/200g
• Yarn Weight: 3

BOTTOM: ENKA (shown in two colors) also pairs cotton with silk, and the addition of wool gives it a rustic yet stable hand. Plies are paired in such a way to create a more subtle blending from one shade to the next.

50% Cotton
20% Silk
15% Wool
15% Polyamide
• 500m/200g
• Yarn Weight: 3

NEEDLES: DRIFTWOOD BY LYKKE PHOTOGRAPH BY JACK DEUTSCH

THE EASY-PEASY PONCHO

New to knitting? Or looking for a mindless project for binge-watching? This simple topper just requires casting on, knitting, and binding off, and with a few rows each evening, you'll be done in no time!

NEED HELP?
If you don't live with a knitter, or you aren't able to get to your local yarn store, then take a look on YouTube. There are many excellent tutorials with clear videos and detailed explanations.

Here's how to make it

WHAT YOU WILL NEED
- 2 balls of Noro Kakigōri in color #9
- Size US 10 (6mm) circular needle, 24"/60cm long or longer, OR SIZE TO OBTAIN GAUGE
- Stitch markers
- Size D-3 (3.25mm) crochet hook

CHECK YOUR GAUGE BEFORE YOU BEGIN
Gauge means the number of stitches and rows measured over 4"/10cm. For the poncho, that is 14 stitches and 16 rows. If you don't get the correct gauge you will need to change your needle size, and keep trying until you get it right. Then you can begin!

SKILL LEVEL
●○○○
BEGINNER
This is perfect for new knitters—it fits almost anyone and it requires just one simple stitch.

ABOUT KAKIGŌRI
50% Cotton, 30% Silk, 10% Viscose, 10% Polyamide
This super-soft colorful cotton-blend yarn is highlighted with colorful flecks which give a speckled appearance when the yarn is knit. It's really lightweight, making it perfect for warm-weather garments like this one.

FINISHED MEASUREMENTS
- Front Length 20"/51cm
- Back Length 23"/59cm
- Shoulder Width 40"/102cm

SPECIAL NOTES
- This poncho is made in one piece, beginning with the lower edge of the front and ending at the lower edge of the back.
- The back is 3"/8cm longer than the front, but you can make them the same if you would prefer.
- A circular needle is used to accommodate the large number of sts. Work back and forth, as you would on straight needles—do not join and work circularly.

FRONT
Cast on 150 sts.
Work in garter stitch (knit every row) for 20"/51cm.

SHAPE NECK
NEXT ROW (RS) K54, bind off center 42 sts, k to end. Place markers on each side of last row.

BACK
NEXT ROW (WS) K54, cast on 42 sts, k to end—150 sts.
Continue in garter stitch for 23"/58.5cm from markers. Bind off all the sts loosely knitwise.

FINISHING
Block lightly to measurements.
Measure 14"/35.5cm (or desired depth) down from the shoulder markers and tack the armholes together.
With the RS facing and crochet hook, work a row of single crochet (sc) evenly around the neck opening. Do not turn. Work backwards single crochet (from left to right) in each single crochet (sc). Fasten off. ❖

PHOTOGRAPHS BY JACK DEUTSCH. STYLED BY JESSICA SAAL. HAIR AND MAKEUP STYLED BY CINDY ADAMS.

trending

IT'S A SHAWL THING

Each of our eye-catching wraps features a special knitting technique, all set to inspire you to try something new!

1
Melissa Dehncke McGill's stunning oversized **MEDUSA WRAP** features two complementary shades of SONATA. It begins with a wide band of stockinette stranded knitting and morphs into corrugated striping for the remainder of the length. Garter edges are worked while knitting.

PHOTOGRAPHS BY JACK DEUTSCH. STYLED BY JESSICA SAAL. HAIR AND MAKEUP STYLED BY CINDY ADAMS.

IT'S A SHAWL THING

entrelac

2

Laura Zukaite's lightweight **TANGERINE EYELET WRAP** is worked from two jumbo balls of ENKA. A generous rectangle of entrelac forms the base; stitches are picked up along the lower edge and an eyelet border that mimics the diamond entrelac shapes is added. A row of backwards crochet finishes the edges.

stripes

3

A single ball of two contrasting shades of MIRAI makes up the stripes in the eye-catching **PIEDRA SHAWL**. Designer Katherine Mehls begins with a garter tab, and shapes by adding increases at the center and sides. After a garter border she moves on to two-row stockinette stripes.

IT'S A SHAWL THING

eyelets

4

The **SWEEPING WAVES** shawl, designed by Zabeth Weiner, is knit side to side, making the most of the self-striping colorways inherent in ENKA (just two balls are used). The design features five evenly spaced diagonal mesh patterns that sweep across the shawl. Each row begins and ends with a tidy three-stitch I-cord.

5

Designed by Lori Steinberg in three coastal-inspired shades of KAKIGORI, the **SHIFTING SANDS WRAP** is constructed of contrasting patterned bands. Eyelet ridges, poetic rosebuds, wrapped stitches and an allover eyelet and drop-stitch pattern are a statement in texture. Knitting begins at the lower wide edge; decreases on both sides create the shaping.

IT'S A SHAWL THING

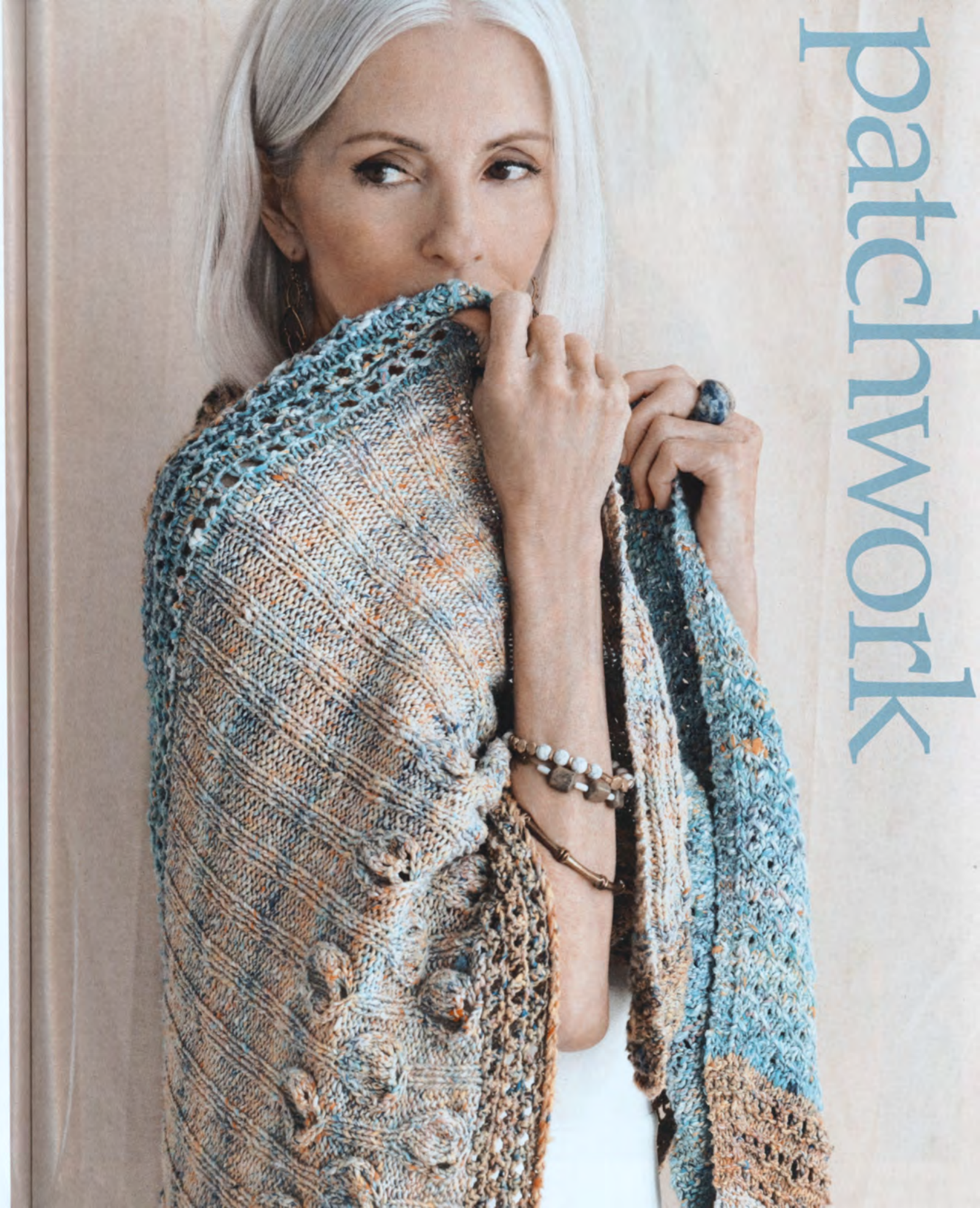

patchwork

mesh & garter

IT'S A SHAWL THING

6

Jacob Seifert chose two shades of SONATA for his contrasting bands of garter stitch and left- and right-leaning eyelets. The **SUMMER CITRUS SHAWL** incorporates short rows to shape and create stripes. Just two skeins of each color are needed.

ONE SHAWL, SO MANY CHOICES!

SHAWLS ALLOW PLENTY OF FLEXIBILITY FOR SUBSTITUTING YOUR FAVORITE NORO YARN

It's really important, our editors agree, to use the yarn recommended in a pattern. You can see what the end result will look like, you know the pattern works for the gauge of the specified yarn, and you know exactly how much yarn to buy. With garments, if you get the gauge right, you know the fit should be perfect. Shawls, on the other hand, don't fit, and a good pattern can work in many yarns.

We challenged designer LORI STEINBERG to come up with a universal shawl pattern for this season. The **CORAL SUNRISE SHAWL**, worked in GESHI, is swatched in seven other yarns, giving you so many NORO color options.

GESHI

- 41% viscose/35% cotton/12% silk/12% wool
- **Finished measurements:** 38" x 70"/76cm x 178cm
- **Yarn weight:** (3)
- **Gauge:** 20 sts and 30 rows to 4"/10cm on a US6/4mm needle
- **Yarn needed:** 2 x 200g/656yd skeins

PHOTOGRAPHS BY JACK DEUTSCH. STYLED BY JESSICA SAAL. HAIR AND MAKEUP STYLED BY AGATA HELENA.

DESIGNER NOTEBOOK

CHOOSE YOUR FAVORITE NORO YARN (we selected the spring season yarns in a similar weight to Geshi), and we have calculated the amount of yarn, the gauge, and the finished measurements for each substitution for you. The swatches vary a little in size, which is due to the variances in the weight and gauge of each yarn.

- Each swatch shows the vine lace border pattern, as well as the sand stitch pattern that's used for the body of the shawl. The difference in gauge between a lace pattern and a knit/purl stitch pattern changes the shape of the swatch.
- The gauge given for each yarn is measured over the sand stitch pattern.
- The shawl is constructed with a provisional cast on at the widest point and decreases to a right-angled triangle.The shawl measurements are for the shorter and longer edges only.
- When making the shawl in one of these substitute yarns, you do not have to adjust the pattern. Just follow the pattern as written, and as long as your gauge is correct you'll achieve the shawl measurements listed.

We'd love to see your results! Share your progress on social media with *#norosummershawl*.

KUMO
The yarn is blended with white to give an antique look.
- 41% viscose/35% cotton/12% silk/12% wool
- **Finished measurements:** 41.5" x 56.5"/105.4cm x 143.5cm
- **Yarn weight:** 3
- **Gauge:** 22 sts/40 rows to 4"/10cm on US5/3.5mm needles
- **Yarn needed:** 4 x 100g/393yd skeins

TSUBAME
Named for Japan's migrating barn swallow.
- 50% silk/25% wool/25% polyamide
- **Finished measurements:** 40" x 73"/101cm x 185.5cm
- **Yarn weight:** 4
- **Gauge:** 18.5 sts/32 rows to 4"/10cm on US6/4mm needles
- **Yarn needed:** 2 x 200g/656yd skeins

SILK GARDEN SOCK SOLO
A DK weight in semi-solid tweedy colors.
- 40% wool/25% silk/25% polyamide/10% mohair
- **Finished measurements:** 47" x 55"/119.5cm x 140cm
- **Yarn weight:** 2
- **Gauge:** 20.5 sts/34 rows to 4"/10cm on US6/4mm needles
- **Yarn needed:** 4 x 100g/328yd skeins

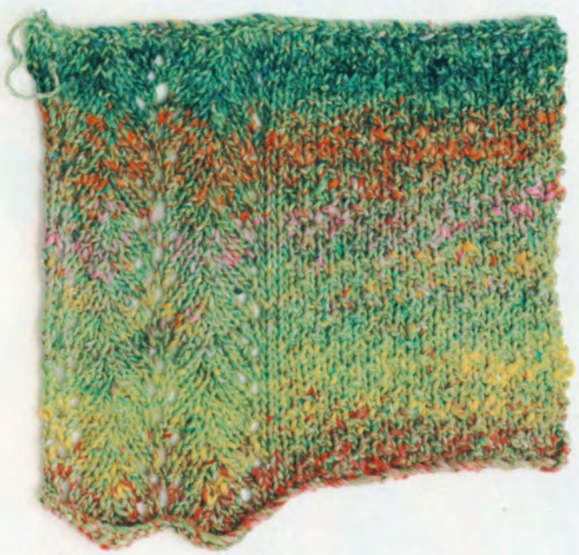

MIRAI
Contains no animal fibers; the name means "the future."
- 40% cotton/25% silk/25% viscose/10% polyamide
- **Finished measurements:** 47.5" x 70.5"/120.5cm x 179cm
- **Yarn weight:** 4
- **Gauge:** 20 sts/32 rows to 4"/10cm on US7/4.5mm needles
- **Yarn needed:** 5 x 100g/328yd skeins

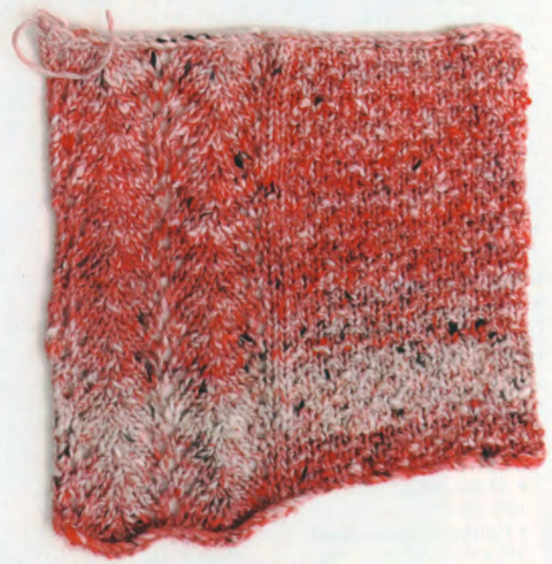

AKARI
The Japanese word for "glimmer," for the sheen of the silk.
- 26% silk/21% cotton/15% viscose/14% mohair/12% wool/12% poly.
- **Finished measurements:** 50.5" x 73"/128cm x 185.5cm
- **Yarn weight:** 4
- **Gauge:** 18 sts/32 rows to 4"/10cm on US7/4.5mm needles
- **Yarn needed:** 3 x 200g/528yd skeins

KAKIGORI
This soft yarn is named for a Japanese shaved ice dessert.
- 50% cotton/30% silk/10% viscose/10% polyamide
- **Finished measurements:** 42.5" x 73"/108cm x 185.5cm
- **Yarn weight:** 3
- **Gauge:** 21 sts/34 rows to 4"/10cm on US6/4mm needles
- **Yarn needed:** 3 x 200g/656yd/600m skeins

ENKA
Enka is the old Japanese word for fireworks.
- 50% cotton/20% silk/15% wool/15% polyamide
- **Finished measurements:** 50.5" x 71.5"/128cm x 181.5cm
- **Yarn weight:** 3
- **Gauge:** 19 sts/32 rows to 4"/10cm on US7/4.5mm needles
- **Yarn needed:** 3 x 200g/546yds/500m skeins

dream a little dream...

REST AND REFRESH WITH THESE MODERN CROCHETED BLANKETS

Down time is your time. Meet your perfect partner.

EARTHENWARE
BY JEANNIE CHIN
Two shades of Silk Garden Light, #2094 (Kashiwa) and #2083 (Yokote), contrast in each diagonally split square. Like a quilt, the squares, when pieced together, form an overall zigzag pattern.

PHOTOGRAPHS BY JACK DEUTSCH. STYLED BY JESSICA SAAL.
HAIR AND MAKEUP STYLED BY AGATA HELENA.

dream a little dream...

9

A square here, a square there, and soon you're wrapped in pure joy.

MARINE MIRAGE
BY JEANNIE CHIN
Two sizes of squares make up this striking blanket that shows off the undulating colors of Tabi, here in #12 Munakata, to their best advantage. Squares are crocheted together and a single crochet border finishes it all.

IN THE COMFORT ZONE

THIS SEASON, IT'S ALL ABOUT FEELING RELAXED

CALMNESS
The versatile sweater vest is a year-round favorite. Faux cables are separated by eyelets; twisted ribs make for tidy edges. The long, slouchy shaping is punctuated by openings at the hem. Knit in a rich colorway of TSUMBAME, a beautiful silk, wool and polyamide blend.

10

FIND A NEW LEVEL OF CONTENTMENT IN KNITS THAT DRAPE FREELY

RELAX IN COOL COTTON AS IT LAYS LOOSELY NEXT TO THE SKIN

◀ UNWIND
Two simple rectangles make up this comfy seafoam top knit in KAKIGŌRI. Delicate bands of dropped cross stitches run above the hem; the same bands are used at the neckline and on the sleeves, which are picked up and knit after finishing.

▲ MELLOW
Deep blue SONATA is the perfect choice for this oversized tee that contrasts stockinette with patches of garter stitch at the lower body. The A-line shaping is created with decreases; then increases form the drop shoulders. The sleeves are knit separately.

IN THE COMFORT ZONE

BECALM
Two separate fronts are edged with an eyelet pattern, then joined at the center front to create offset striping on this carefree, easy-to-wear top. Worked in ENKA, this relaxed piece features sloped shoulders, a rolled neck, and hems that are added to the lower front and armholes at finishing.

DISCOVER YOUR NEW KNITTING ZEN AS YOU WATCH COLORS SLOWLY EMERGE

▶ QUIETUDE
Cascsading zigzag eyelets fill the lower portion of this feminine cardigan knit in AKARI. One zigzag on each front continues along the edge to form the button band. Increases shape the sleeve caps, and a stockinette stitch edges the sleeves.

14

15

▲ REPOSE
Three separate pieces make up the front and back of this swingy, summery top knit in GESHI, creating color movement all around. Eyelet patterning adorns the center front and back panels and is used again to edge the neckline and sleeves.

"The cool gray-blue, mossy green, and sandy earth tones of this yarn helped inspire this design, which mimics the feel of a sandy shore, mossy beach rocks, scrubby beach plants, and exposed striped cliff faces on a cool day."—ANNABELLE SPEER

SUMMER SOLSTICE

MARK THE FIRST DAY OF THE NEW SEASON WITH THESE COOL, COLORFUL KNITS

Annabelle Speer perfectly combines texture with Noro's signature color changes to create a very striking fabric for her **PEBBLE BEACH TEE**. Worked in NISHIKI in colorway #9, the body features alternate stripes of dropped garter stitches, eyelets, and bands of stockinette and garter to create interest. One-by-one ribbing provides the perfect edgings.

PHOTOGRAPHS BY JACK DEUTSCH. STYLED BY JESSICA SAAL. HAIR AND MAKEUP STYLED BY AGATA HELENA

16

SUMMER SOLSTICE

Sandi Prosser's two-tone **LEMON DROP PONCHO TOP** is the soft and easy swing tee everyone needs this season. Worked sideways in two shades of KAKIGŌRI that are simply twisted around each other, intarsia-style, each row. It would work equally well in a single colorway. Flattering curved shoulder shaping does away with underarm bulk, and single crochet is used to edge the neckline and armholes.

"Constructed from side to side in one piece with subtle colorblocking, this oversized topper is perfect for layering or alone as a tee. Knitting with Noro Kakigōri to a looser gauge creates a cozy but light garment."–SANDI PROSSER

"I designed this in simple garter stripes to show off the subtle monochromatic color gradient of Noro Sonata. The garment is worked in one piece and incorporates an open-stitch shoulderyoke detail to accentuate the neckline."–LAURA ZUKAITE

SUMMER SOLSTICE

Laura Zukaite's relaxed **GOLDEN MOSS** T-shaped tunic is knit in one piece, casting on and off for the sleeves and for the opening of the wide boatneck. Worked in SONATA in #18, it takes just three skeins for the smallest size. The body alternates bands of garter and stockinette; the yoke features an on-trend mesh pattern. A single row of backwards crochet worked around the neckline adds stability.

18

SUMMER SOLSTICE

The **OCEAN SUNSET CARDI**, designed by Wei Wilkins, is the perfect piece to slip on at the end of the day as the air cools. The rich colors of TSUBAME (colorway #9) unfold beautifully in this cocoon-shaped cardigan with three-quarter batwing sleeves. Curved front edges and back hemline add to the drama. The body is worked in an allover rib pattern, the sleeves contrast in simple stockinette, and garter edges finish it perfectly.

19

"The cocoon-style design is inspired by modernist and streamlined concepts. My choice of simple stitches and large-scale patterns lets the Tsubame yarn do all the work, with the changing colors revealing vibrant outlooks."–WEI WILKINS

SUMMER SOLSTICE

Deborah Newton's stunning **PEACH BLOSSOM** oversized pullover features ultra-modern shaping and thoughtful details. The generous sizing makes it extremely comfortable to wear. The body features an easy four-row mesh pattern, a deep V-neck, and a flattering longer, curved back. Rib sleeves are picked up and knit down. Worked in AKARI, in best-selling colorway #6.

20

"I designed this oversized pullover in an easy openwork pattern to keep the garment light and to mimic a 'thermal' fabric. The unfolding of the subtle color changes is very rewarding in the soft Akari yarn."–DEBORAH NEWTON

"I'm always fascinated with how the colors change in Noro yarns to form stripes. The simple shape makes this sweater easy to knit and fun to wear. I enjoyed making it and would love to wear it."—ROSEMARY DRYSDALE

SUMMER SOLSTICE

TURQUOISE & TANGERINE, designed by Rosemary Drysdale, is the ultimate comfy summer tee. Worked in TAIYO, color #104 features bursts of these summery shades on a more neutral background. The body is knit in an allover mistake rib that keeps the fabric flat and light. One-by-one rib sleeves are picked up and knit down to below the elbows and can easily be customized to any length.

21

OPEN SEASON

CROCHETED WRAPS & PONCHOS PERFECT FOR LAID-BACK LIVING

22

PHOTOGRAPHS BY JACK DEUTSCH. STYLED BY JESSICA SAAL. HAIR AND MAKEUP STYLED BY CINDY ADAMS.

23

SPRING WOODLANDS SHAWL (facing page) Colorful Akari and single-shade Sonata play off each other in this striking shawl by Kaye Adolphson. Crocheted in three pieces, it begins with working the two sides, joining them and adding the center. Backwards crochet edges finish it perfectly.

TURQUESA TOPPER (this page) Jenny King's pretty poncho top begins with two crocheted chevron lace panels. Side panels, worked in sc, are added, and then the mesh sleeeves. Simple sc's border the neckline. It's worked in teal tones of Silk Garden Sock.

OPEN SEASON

24

25

ROSE MATRIX SHAWL (facing page)
Two soft shades of Kumo pair perfectly in Mari Lynn Patrick's filet crochet shawl. The filled-in meshes are worked intarsia style from a chart. A pretty cluster edging finishes it all.

PACIFICA PONCHO (this page)
Rosemary Drysdale's simple textured topper is perfect for beginners. A two-row pattern is repeated over two rectangles that are simply sewn at the shoulders; the underarms are tacked. This pretty poncho takes just 2 or 3 balls of Kakigōri.

ELLEN LIGUORI
Showcasing every subtlety of Silk Garden Sock Solo, in colorway #1—a soft mélange of natural and cotton-candy shades—this L-shaped shawl's generous wingspan is formed from two rectangular panels. Each is worked lengthwise in textured lattice lace with knit-in seed-stitch borders. After the first panel is complete, the second is picked up and knit from the side edge.

SOLO PERFORMANCE

SILK GARDEN SOCK SOLO DELIGHTS WITH SUBTLE, SUMMERY PASTELS

SOLO PERFORMANCE

"Single" shades are anything but in the hands of Noro. Each is made up of myriad colors.

27
JEANNIE CHIN
Simple and sweet, Chin's crew-neck pullover puts the subtle confetti-on-cream tones of Noro Silk Garden Solo colorway #1 on full display. It's knit flat in an allover bamboo texture stitch; ribbed borders add polish. The drop shoulders are joined with a three-needle bind-off. A true three-season piece thanks to the elbow-length sleeves, it easily dresses up or down.

28
LORNA MISER
Silk Garden Sock Solo lends a feather-weight feel to this swingy cropped cardigan. Knit flat and seamed, it features a charming round neckline and elbow-length sleeves. Narrow garter-stitch and single-rib borders trim the edges. The garter sawtooth hem is sideways-knit into the lower edge in finishing. Multicolor buttons accentuate the brown, blue and pink tones of creamy colorway #1.

1 Medusa Wrap

Shown on page 12.

●●●○

Finished Measurements
- Width approx 59"/150cm
- Length approx 59"/150cm

Materials
Noro/KFI *Sonata*, 3½oz/100g skeins (each approx 393yd/359m) of (cotton/viscose/silk/polyamide)
- 4 skeins in #06 Teal (A)
- 3 skeins in #08 Caramel (B)
- One pair size 4 (3.5mm) needles OR SIZE TO OBTAIN GAUGE
- Stitch markers

Gauge
34 sts and 32 rows = 4"/10 cm over rows 127 and 128 of chart pat using size 4 (3.5mm) needles.
TAKE TIME TO CHECK GAUGE.

Note
1) Chart pat is worked in St st using stranded colorwork method. When changing colors, twist yarns on WS to prevent holes in work and carry color not in use loosely across WS to prevent puckering.
2) One row of chart represents two rows of knitting. Read RS (odd-numbered) rows from right to left. Work foll WS rows as purl, matching colors from previous row.

WRAP
With A, cast on 3 sts for left edge, 390 sts for chart pattern and 3 sts more for right edge—396 sts in total. Knit 4 rows.

BEG CHART
Row 1 (RS) K3A, pm, work row 1 of chart to last 3 sts, pm, k3 A.
Row 2 (WS) K3A, sm, p to last 3 sts matching colors, sm, k3 A.

BEG SIDE DEC
Cont in pat as established, keeping first and last 3 sts in garter st with A and rem sts in chart pat, and work decs as foll:
Dec row 1 (RS) K3A, sm, k2tog, work chart to last 3 sts, sm, k3 A—1 st dec'd.
Dec row 2 (WS) K3A, sm, p to last 5 sts, p2tog, sm, k3 A—1 st dec'd.
Dec row 3 (RS) K3A, sm, k2tog, work chart to last 3 sts, sm, k3 A—1 st dec'd.
Dec row 4 (WS) K3A, sm, p to last 3 sts, sm, k3 A. Rep last 4 rows until piece measures 12"/30.5cm from beg, then cont to rep dec rows 1 and 2 only, AT THE SAME TIME, after row 128 of chart have been worked, cont to rep rows 127 and 128 of chart, and rep dec rows 1 and 2, until 12 sts rem, working last WS row as foll:
Next row (WS) K3A, p2B, p2A, k2B tog, k3A—11 sts.
Cut B and cont with A only.
Next row (RS) K3, k2tog k1, k2tog, k3—9 sts.

BEG GARTER BORDER
Next row (WS) K2, k2tog, k1, k2tog, k2—7 sts.
Next row K1, k2tog, k1, k2tog, k1—5 sts. Bind off.

FINISHING
Block piece to measurements. ■

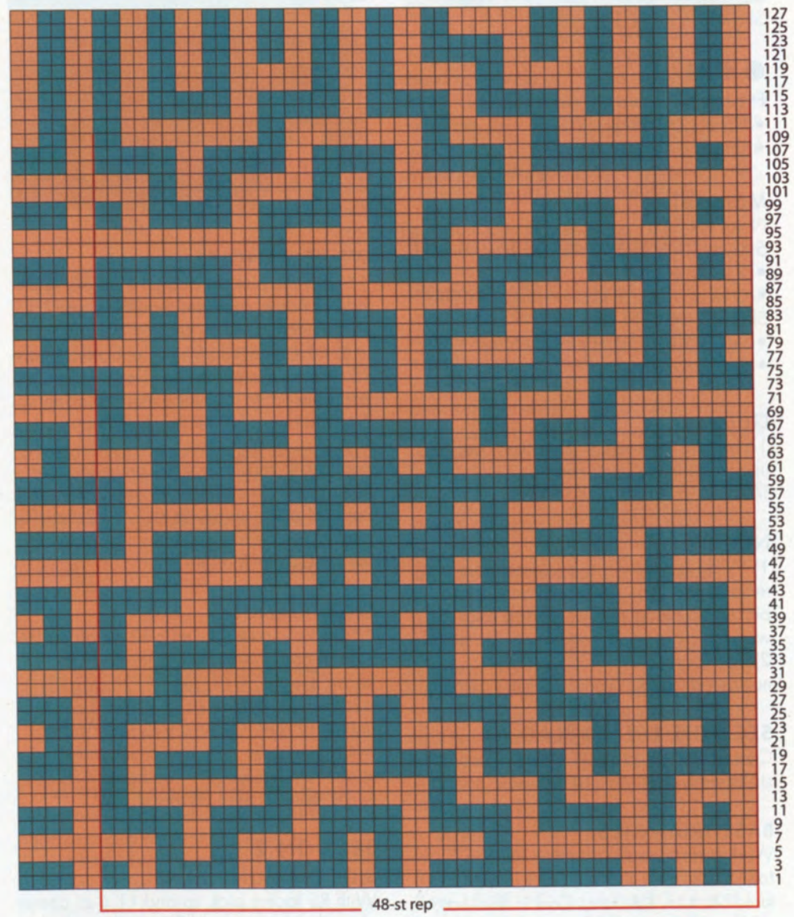

Color Key ■ Teal (A) ■ Copper (B)

2 Tangerine Eyelet Wrap

Shown on page 14.

●●●○

Finished Measurements
- Width 24"/61cm
- Length 64"/162.5cm

Materials
Noro/KFI *Enka* 7oz/200g balls each approx 550yd/500m (cotton/silk/wool/polyamide)
- 2 balls in #4 Kobe
- One pair size 9 (5.5mm) needles OR SIZE TO OBTAIN GAUGE
- Size F-5 (3.75mm) crochet hook
- Stitch markers

Gauge
16 sts and 24 rows = 4"/10cm over St st using size 9 (4.5mm) needles.
TAKE TIME TO CHECK GAUGE.

Notes
1) Wrap is made in two pieces: one rectangle in 3 Entrelac pat, then sts are picked up along one long edge and worked in diamond pattern for side panel.
2) The chart shows only RS (odd-numbered) rows. Work WS rows as purl.

SECTION 1–ENTRELAC
Cast on 42 sts, placing a marker every 14 sts to mark each pattern repeat.

BASE TRIANGLES
Work base triangles (starting WS) as foll: **P2, turn; K2, turn; P3, turn, K3, turn; P4, turn, K4, turn; Cont in this way, adding 1 st every other row, until there are 14 purl sts worked on the WS. Do *not* turn.**. Rep from ** to ** twice more and on last rep, turn to work on the RS. Three base triangles are complete.

RH CORNER TRIANGLE
K2, turn; P2, turn; **Next row (RS)** Kfb, ssk, turn; P3, turn. **Next row (RS)** Kfb, k1, ssk, turn; P4, turn. **Next row (RS)** Kfb, k2, ssk, turn; P5, turn. Cont in this way until there are 14 knit sts on RH needle and all sts from triangle have been used, ending with a RS row. Do *not* turn.

RS RECTANGLES
Pick up and k14 sts along left side of first triangle/rectangle, turn; P14, turn. *K13, ssk, turn; P14, turn; rep from * until all sts from second base triangle are used up and ending with a RS row. Do *not* turn at end of last RS row.
Rep from ** to ** once more. Do *not* turn.

LH CORNER TRIANGLE
Pick up and k14 sts along the left side edge of the last triangle/rectangle, turn.
P2tog, p12, turn; K13, turn.
P2tog, p11, turn. K12, turn.
P2tog, p10, turn. K11, turn.
Cont in this way until 2 sts rem, end with a RS row, turn; P2tog, do not turn—1 st rem.

WS RECTANGLES
On WS, pick up and p13 sts along LH side of corner triangle, turn (there are 14 sts on needle); K14, turn. *P13, p2tog, turn; K14, turn; rep from * until all sts from RS rectangle are used up. Do *not* turn
Rep from ** to ** twice more (picking up 14 sts along other rectangles). Turn work.

Rep last 4 steps from RH Corner Triangle through WS Rectangles for main Entrelac Pat until piece measures 60"/152.5cm (a total of 9 side triangle repeats). End with the LH Corner Triangle.

END TRIANGLES
On WS, pick up and p13 sts along LH side of corner triangle/rectangle, turn (14 sts on needle); K14, turn. *P2tog, p11, p2tog, turn; Knit all sts, turn; rep from * until 4 sts rem. On next WS row, [p2tog] twice then pass first st over second st—1 st rem. Do not turn. Rep from ** to ** twice more. Fasten off last st.

SECTION 2
SIDE DIAMOND PANEL
With RS facing pick up and k1 st at corner of work, pick up and k24 sts along the first side triangle, pm (place marker), *pick up and k1 st at center between 2 triangles, pick up and k24 sts along next side triangle, pm; rep from *, end by picking up and knit last corner st—226 sts. Purl 1 row.

BEG DIAMOND PATTERN
Row 1 (RS) Work first st of chart, working 25-st rep 9 times.
Cont in pat as established through row 42. Bind off all sts knitwise.

FINISHING
Block to measurements. With RS facing and crochet hook, work sc evenly around outer edge, then work backwards sc (from left to right) in each st. Fasten off. ■

Diamond Pattern

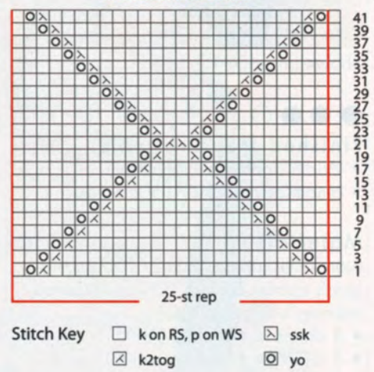

3 Piedra Shawl

Shown on page 16.

●●○○

Finished Measurements
- Wingspan 50"/127cm
- Length at center 24"/61cm

Materials
Noro/KFI *Mirai* 3½oz/100g balls, each approx 328yd/300m (cotton/silk/viscose/polyamide)
- 1 ball each in #38 Arakawa (MC) and #22 Nomi (CC)
- One size 7 (4.5mm) circular needle, 32"/80cm long, OR SIZE TO OBTAIN GAUGE
- Four stitch markers

Gauge
20 sts and 32 rows = 4"/10cm over St st using size 7 (4.5mm) needle.
TAKE TIME TO CHECK GAUGE.

Stitches Used
M1R Insert LH needle from back to front under the strand between last stitch worked and next stitch on LH needle. Knit into the front loop to twist the stitch—1 stitch increased.
M1L Insert LH needle from front to back under the strand between last st worked and next st on LH needle. K into the back loop to twist the stitch—1 stitch increased.
St st Knit on right side, purl on wrong side
Super Stretchy Bind Off K2, *slip both sts back to LH needle, k2tog tbl, k1; rep from * to end.

SHAWL
Note: Circular needle is used to accommodate the large number of sts. Do *not* join.
With MC, cast on 7 sts, leaving a 5"/12.5cm tail.
Set-up row 1 (WS) K3, place marker (pm), p1, pm, k3. **Set-up row 2 (RS)** K3, M1L, k1, M1R, k3—2 sts inc'd. **Set-up row 3** K3, pm, p3, pm, k3. Join CC.

BEG STRIPE PAT
Row 1 (RS) K3, slip marker (sl m), M1L, k to marker, M1R, sl m, k1, sl m, M1L, k to next marker, M1R, sl m, k3—4 sts inc'd.
Row 2 (WS) K3, p to last 3 sts, k3.
Rep last 2 rows, alternating MC and CC every 2 rows until there are 112 rows in stripe pat—233 sts.

GARTER STITCH HEM
Row 1 (RS) K3, sl m, M1L, k to marker, M1R, sl m, k1, sl m, M1L, k to marker, M1R, sl m, k3—4 sts inc'd. **Row 2 (WS)** K to 2nd marker, sl m, p1, sl m, k to end.
Rep last 2 rows 15 times more—approx 3"/7.5cm.
Bind off using Super Stretchy bind off.

FINISHING
Block to measurements. Use 5"/12.5cm tail from cast on to close up gap. ■

4 Sweeping Waves

Shown on page 18.

●●●●

Finished Measurements
- Wing Span approx 66"/168cm
- Length from center back approx 33"/84cm

Materials
Noro/KFI *Enka* 7oz/200g balls each approx 550yd/500m (cotton/silk/wool/polyamide)
- 2 balls in #06 Mito
- Size 7 (4.5mm) circular needle 40"/100cm long, OR SIZE TO OBTAIN GAUGE
- Stitch markers

Gauge
18 sts and 32 rows = 4"/10 cm over garter st using size 7 (4.5mm) needles.
TAKE TIME TO CHECK GAUGE.

Notes
1) The shawl is worked from side to side with 5 evenly spaced diagonal mesh patterns and a mesh triangle at the top.
2) First half (skein 1) is shaped by increases; second half (skein 2) is shaped by decreases. For the second half, find the matching point in the second skein for the stripes to mirror the first half.
3) A 3-st I-cord is worked each side of every row.
4) Increases are worked on the RS with yo before the I-cord, and decreases are worked with SK2P, yo, on the RS before the edge I-cord.

Diagonal mesh pat to the left
(over 6 sts)
Row 1 (RS) [Yo, k2tog] 3 times.
Row 2 (WS) P6.
Rep rows 1 and 2.

Diagonal mesh pat to the right
(over 6 sts)
Row 1 (RS) [Ssk, yo] 3 times.
Row 2 (WS) P6.
Rep rows 1 and 2.

FIRST HALF
Cast on 6 sts. Work foundation rows to establish I-cord edges as foll:
Next row (RS) [K1, slip1 wyif] 3 times.
Next row (WS) [K1, slip1 wyif] 3 times.
With RS facing, carefully remove needle to separate sts. Slip 3 sts leaning to the back to needle, then slip rem sts 3 sts in front of these sts. There are 6 sts on needle, with working yarn at back at the center.

BEG INCREASE SHAPING
Next row (RS) K3, pm, yo, pm, sl 3 wyif.
Next row (WS) K3, sl m, k1, sl m, sl 3 wyif. **Next row** K3, sl m, k to marker, yo, sl m, sl 3 wyif. **Next row** K3, sl m, k to marker, sl m, sl 3 wyif.
Rep last 2 rows until there are 14 sts between markers.
Note Cont to slip markers after first 3 sts and before last 3 sts every row. This will no longer be noted in the instructions.

FIRST DIAGONAL MESH PAT
Row 1 (RS) k3, yo, k2tog, k12, yo, sl 3 wyif. **Row 2** K3, k13, p2, sl 3 wyif. **Row 3** K3, k1, yo, k2tog, k12, yo, sl 3 wyif. **Row 4** K3, k13, p3, sl 3 wyif. **Row 5** K3, [yo, k2tog] twice, k12, yo, sl 3 wyif. **Row 6** K3, k13, p4, sl m, sl 3 wyif. **Row 7** K3, k1, [yo, k2tog] twice, k12, yo, sl 3 wyif. **Row 8** K3, k13, p5, sl 3 wyif. **Row 9** K3, [yo, k2tog] 3 times, k12, yo, sl 3 wyif. **Row 10** K3, k13, p6, sl 3 wyif. **Row 11** K3, k1, [yo, k2tog] 3 times, k12, yo, sl 3 wyif. **Row 12** K3, k13, p6, k1, sl 3 wyif. **Row 13** K3, k2, [yo, k2tog] 3 times, k12, yo, sl 3 wyif. **Row 14** K3, k13, p6, k2, sl 3 wyif. **Row 15** K3, k2, [yo, k2tog] 3 times, k13, [yo, k2tog] 2 times, k12, yo, sl 3 wyif.

Row 16 K3, [k13, p6] twice, k2, sl 3 wyif. **Row 17** K3, k3, [yo, k2tog] 3 times, k13, [yo, k2tog] 2 times, k12, yo, sl 3 wyif. **Row 18** K3, [k13, p6] twice, k3, sl 3 wyif. Cont in this way, adding 1 more garter st before the mesh pat until there are 33 sts between markers and 39 sts in total. **Row 38** K3, k13, p6, k14, sl 3 wyif.

SECOND DIAGONAL MESH PAT

Row 1 (RS) K3, yo, k2tog, k13, [yo, k2tog] 3 times, k12, yo, sl 3 wyif.
Row 2 K3, k13, p6, k13, p2, sl 3 wyif.
Row 3 K3, k1, yo, k2tog, k13, [yo, k2tog] 3 times, k12, yo, sl 3 wyif.
Row 4 K3, k13, p6, k13, p3, sl 3 wyif.
Row 5 K3, [yo, k2tog] twice, k13, [yo, k2tog] 3 times, k12, yo, sl 3 wyif.
Row 6 K3, k13, p6, k13, p4, sl 3 wyif.
Row 7 K3, k1, [yo, k2tog] twice, k13, [yo, k2tog] 3 times, k12, yo, sl 3 wyif.
Row 8 K3, k13, p6, k13, p5, sl 3 wyif.
Row 9 K3, [yo, k2tog] 3 times, k13, [yo, k2tog] 3 times, k12, yo, sl 3 wyif.
Row 10 K3, [k13, p6] twice, sl 3 wyif.
Row 11 K3, k1, [yo, k2tog] 3 times, k13, [yo, k2tog] 3 times, k12, yo, sl 3 wyif.
Row 12 K3, [k13, p6] twice, k1, sl 3 wyif. **Row 13** K3, k2, [yo, k2tog] 3 times, k13, [yo, k2tog] 3 times, k12, yo, sl 3 wyif. **Row 14** K3, [k13, p6] twice, k2, sl 3 wyif. **Row 15** K3, k3, [yo, k2tog] 3 times, k13, [yo, k2tog] 3 times, k12, yo, sl 3 wyif. **Row 16** K3, [k13, p6] twice, k3, sl 3 wyif. Cont in this way, adding 1 more garter st before mesh pat through row 37—58 sts. **Row 38** K3, [k13, p6] twice, k14, sl 3 wyif.

THIRD DIAGONAL MESH PAT

Cont adding 1 more garter st before mesh pat, through row 37—77 sts. **Row 38** K3, [k13, p6] 3 times, k14, sl 3 wyif.

FOURTH DIAGONAL MESH PAT

Cont adding 1 more garter st before mesh pat through row 37—96 sts. **Row 38** K3, [k13, p6] 4 times, k14, sl 3 wyif.

FIFTH DIAGONAL MESH PAT

Cont adding 1 more garter st before mesh pat through row 37—115 sts. **Row 38** K3, [k13, p6] 5 times, k14, sl 3 wyif.

CENTER TRIANGULAR MESH PAT

Rows 1–12 Cont as established, but instead of working new sts in garter st, work all sts in mesh pat after row 12 of mesh pat. **Row 13** K3, [yo, k2tog] 4 times, *k13, [yo, k2 tog] ; rep from * 4 times more, end with k12, yo, sl 3 wyif. **Row 14** K3, [k13, p6] 5 times, k13, p to marker, sl 3 wyif. **Row 15** K3, k1, [yo, k2tog] 4 times, *k13, [yo, k2 tog] 3 times; rep from * 4 times more, end with k12, yo, sl 3 wyif. **Row 16 and all WS rows to end of section** Rep row 14.
Row 17 K3, [yo, k2tog] 5 times, *k13, [yo, k2 tog] 3 times; rep from * 4 times more, k12, yo, sl 3 wyif. **Row 19** K3, k1, [yo, k2tog] 5 times, *k13, [yo, k2 tog] 3 times; rep from * 4 times more, k12, yo, sl 3 wyif. Cont as established adding 1 more (yo, k2tog) every 4 rows through row 48—139 sts. **Row 49** K3, [yo, k2tog] 13 times, *k13, [yo, k2 tog] 3 times; rep from * 4 times more, end k12, yo, sl 3 wyif—140 sts. **Row 50** K3, [k13, p6] 5 times, k13, p 26, sl 3 wyif.

SECOND HALF

Next row (RS) K to last marker, yo, sl 3 wyif—141 sts. Cut yarn.
Find the matching color in the yarn to mirror the stripes on the second skein. If you started from the inside of the first skein, find the matching color starting on the outside and vice versa.
Next row (WS) K3, k14, [p6, k13] 5 times, p26, sl 3 wyif.

BEG DECREASE SHAPING

Note: Mesh pat now slants to the right.
Row 1 (RS) K3, k1, [ssk, yo] 12 times, *k13, [ssk, yo] 3 times; rep from * 4 times more, k to 3 sts before marker, sl 1, ssk, psso, yo, sl 3 wyif—1 st dec'd.
Row 2 (WS) K3, k14, [p6, k13] 5 times, p to marker, sl m, sl 3 wyif. **Row 3** K3, [ssk, yo] 12 times, *k13, [ssk, yo] 3 times; rep from * 4 times more, k to 3 sts before marker, sl 1, ssk, psso, yo, sl 3 wyif—1 st dec'd. **Row 4** K3, k14, [p6, k13] 5 times, p to marker, sl 3 wyif.
Row 5 K3, k1, [ssk, yo] 11 times, *k13, [ssk, yo] 3 times; rep from * 4 times more, k to 3 sts before marker, sl 1, ssk, psso, yo, sl 3 wyif—1 st dec'd. **Row 6** K3, k14, [p6, k13] 5 times, p to marker, sl 3 wyif.
Row 7 K3, [ssk, yo] 11 times, *k13, [ssk, yo] 3 times; rep from * 4 times more, k to 3 sts before marker, sl 1, ssk, psso, yo, sl 3 wyif—1 st dec'd. **Row 8** K3, k14, [p6, k13] 5 times, p to marker, sl 3 wyif.
Cont in this way dec'ing 1 st every RS row until all diagonal mesh pat sts have been dec'd. Work in garter st over all sts, cont to dec as before until 6 sts from side I-cords rem. Reverse order of 3 sts on LH side and graph the 6 sts tog with a Kitchener stitch.

FINISHING

Block piece to measurements. ■

5 Shifting Sands Wrap

Shown on page 20.

●●○○

Finished Measurements

- Width along top edge 67"/170.5cm
- Length from top edge to tip 39"/99cm

Materials

Noro/KFI *Kakigori* 7oz/200g balls, each approx 660yds/600m (cotton/silk/viscose/polyamide)
- 1 ball each in #12 Himeji (A), #1 Naha (B), and #13 Fukuyama (C)
- Size 7 (4.5mm) circular needle, 24"/60cm long OR SIZE TO OBTAIN GAUGE
- Cable needle (cn)
- Stitch markers

Gauge

16 sts and 32 rows = 4"/10 cm over eyelet ridge pat using size 7 (4.5mm) needles. TAKE TIME TO CHECK GAUGE.

Eyelet Ridge Pattern

(over an odd number of sts)
Row 1 (RS) Knit. **Row 2** Purl. **Row 3** Knit. **Row 4** Knit. **Row 5** *K2tog, yo; rep from * to last st, k1. **Row 6** Knit.
Rep rows 1–6 for eyelet ridge pat.

Rosebud (over 2 sts)

Row 1 (RS) Sl 1 st to cn and hold to *front*, k1, [yo] 5 times, k1 from cn—7 sts.
Row 2 P1, [k1tbl] 5 times, p1. **Row 3** [K1, yo] 6 times, k1. **Row 4** P13. **Row 5** K13. **Row 6** P2tog, p9, p2tog tbl.
Row 7 SKP, k7, k2tog. **Row 8** P2tog, p5, p2tog tbl. **Row 9** SKP, k3, k2tog.
Row 10 P2tog, p1, p2tog tbl.
Row 11 SKP, k1. **Row 12** P2.

Allover Eyelet Pat (multiple of 6 sts)

Row 1 (RS) *Sl 1, k2, pass slip stitch over 2 k sts, k3; .rep from * to end.
Row 2 P4, *yo, p5; rep from * to last st, yo, p1. **Row 3** *K3, sl 1, k2, pass slip stitch over 2 k sts; rep from * to end.
Row 4 P1, *yo, p5; rep from * to last 4 sts, yo, p4.
Rep rows 1–4 for allover eyelet pat.

Notes

1) Circular needle is used to accommodate large number of sts, do *not* turn.
2) Decrease are worked at different rates on each side, use 2 row counters to help keep track.
3) Work decreases on RS rows after first marker every 4th row, and before last marker every 6th row.
4) Keep first 3 and last 5 sts of every RS row in garter st (k every row) throughout.

SHAWL

With A, cast on 183 sts.
Row 1 (RS) K3, place marker, work row 1 of eyelet ridge pattern to last 5 sts, place marker, k5 for garter stitch upper edge.
Row 2 K5, sl marker, work in eyelet ridge pattern to last marker, sl marker, k3.
Row 3 K3, sl marker, SKP, cont in pat to 2 sts before last marker, k2tog, sl marker, k5.
Cont in this way, keeping first 3 and last 5 sts in garter st and working decreases after first marker every 4th row, and 2 sts before last marker every 6th row.
Work in eyelet ridge pat until rows 1–6 have been completed 3 times—176 sts.

BEG ROSE BUD PAT

Next row (RS) With B, knit.
Set up row (WS) K5, sl marker, k8, place marker, [p2, k3] 30 times, p2, place marker, k8, sl marker, k3.
****Next row** K to 2nd marker, sl marker, k2, *p3, work row 1 of rosebud, p3, k2; rep from * to next marker, k to end.
Cont as established, working sts outside of markers in garter st and working until the 12 rows of rosebuds are complete.**
(**Note:** Remove center 2 markers when garter sts have been dec'd out of the pat.)
Cont as established working rosebuds in alternate columns of knit sts until this second set of rose buds is complete, then rep from ** to ** once more.
Cont in p3, k2 rib as established for 46 rows more, end with a WS row.

EYELET RIDGE PAT

With C, work rows 1–6 of eyelet ridge pat 3 times.

BEGIN DROP STITCH PAT

With A, knit 1 row—133 sts.
Next row (WS) K5, sl marker, p to next marker, k3.
Set-up row K to marker, sl marker, SKP, *p2, k1, yo, k1, p2, k2; rep from * to 3 sts before marker, p1, k2tog.
Row 1 K to marker, sl marker, p1, k1, *p2, k2, p3, k2; rep from * , end p1.
Rows 2–5 K the knit sts, and p the purl sts.
Row 6 *Work to the next k3 column, k1, drop stitch and let unravel, k1, p2, k1, yo, k1; rep from * to end.
Row 7 K5, sl marker, k the knit sts and p the purl sts and yos to next marker, k3.
Rows 8–11 K the knit sts, and p the purl sts as they appear.
Row 12 *Work to the next k3 column, k1, drop stitch and let unravel, k1, p2, k1, yo, k1; rep from * to end.
Rep rows 1–12 six times more, rep rows 1–6 once more, omitting yo's in row 6.
Next row (WS) K to marker, sl marker, p to next marker, sl marker k to end—94 sts.

EYELET RIDGE PAT

With B, work rows 1–6 of eyelet ridge pat 3 times. With C, knit 1 row.
Next row (WS) K5, sl marker, p to next marker, k3.

BEGIN ALLOVER EYELET PAT

Cont to work garter st and dec's as established, work 92 rows in allover eyelet pat, working sts that don't fit into 6-st reps in St st.

EYELET RIDGE PAT

With A, work rows 1–6 of eyelet ridge pat 3 times.

ROSEBUD PATTERN

Mark the center 2 sts between the markers.
Next row (RS) With B, knit.
Set-up row (WS) With B, k5, sl marker, k to center 2 marked sts, slip marker, p2, slip marker, k to end.
Next row K3, sl marker, k1, p to next marker, sl marker, work row 1 of rosebud over center 2 sts, sl marker, p to st before last marker, k1, sl marker, k to end.
Cont in pats as established until four 12-row rosebuds are complete.
Work in garter st and rev St st until 10 sts rem, ending with a WS row.
Next (dec) row (RS) K3, k2tog, k to end.
Rep dec row every other row until 4 sts rem.
Next row K4.
Next row K1, k2tog, k1.
Next row P3tog. Fasten off last st.

FINISHING

To block, pin upper edge straight, pin lower edge so that lower point (RH edge as knitting it) falls approx 30"/76cm from corner at opposite edge (LH side as knitting it) and 37"/94cm from other corner (measuring along tip edge of shawl. Pattern and color bands should form diagonals. Spray with water and let dry. ■

6 Summer Citrus Shawl

Shown on page 22.

●●○○

Finished Measurements

- Width (at bind-off) approx 67"/170cm
- Length approx 51"/129.5cm

Materials

Noro/KFI *Sonata* 3½oz/100g skeins each approx 393yd/359m (cotton/viscose/silk/polyamide)
- 2 skeins each in #15 Taupe (A) and #19 Chartreuse (B)
- Size 5 (3.75mm) circular needle, 40"/100cm long, OR SIZE TO OBTAIN GAUGE

Gauges

- 21 sts and 42 rows to 4"/10cm over garter st using size 5 (3.75mm) needle.
- 16 sts and 36 rows to 4"/10cm over lace pats using size 5 (3.75mm) needle.

TAKE TIME TO CHECK GAUGES.

Note At the beg of RS rows, work the k1, kfbf somewhat loosely to accommodate the slant of the increased stitches.

Lace Pattern 1
(begin with a multiple of 3 sts plus 4)
Row 1 (RS) K1, kfbf, *k2tog, yo, k1; rep from * to last 2 sts, k2. **Row 2 and all WS rows** Purl. **Row 3** K1, kfbf, k1, *k2tog, yo, k1; rep from * to last 3 sts, k2tog, k1. **Row 5** K1, kfbf, k2, *k2tog, yo, k1; rep from * to last 3 sts, k3. **Row 7** K1, kfbf, *k2tog, yo, k1; rep from * to last 4 sts, k1, k2tog, k1. **Row 9** K1, kfbf, k1, *k2tog, yo, k1; rep from * to last 4 sts, k4. **Row 11** K1, kfbf, k2, *k2tog, yo, k1; rep from * to last 5 sts, k2, k2tog, k1. **Row 12** Purl.
Rep rows 1–12 for lace pat 1.

Lace Pattern 2
(begin with a multiple of 3 sts plus 4)
Row 1 (RS) K1, kfbf, *yo, ssk, k1; rep from * to last 2 sts, k2. **Row 2 and all WS rows** Purl. **Row 3** K1, kfbf, *yo, ssk, k1; rep from * to last 4 sts, k1, k2tog, k1. **Row 5** Rep row 1. **Row 7** Rep row 3 **Row 9** Rep row 1. **Row 11** Rep row 3. **Row 12** Purl. Rep rows 1–12.

Short Row Wrap & Turn (w&t)
On RS row (on WS row)
1. Wyib (wyif), sl next st purlwise.
2. Move yarn between the needles to the front (back)
3. Sl the same st back to LH needle. Turn work. One st is wrapped.
4. When working the wrapped st, insert RH needle under the wrap and work it tog with the corresponding st on needle.

SHAWL
With A, cast on 3 sts. **Row 1 (RS)** With A, k1, k into front, back and front of next st (kfbf), k1—5 sts. **Row 2** With A, knit. **Row 3** With B, k1, kfbf, k to end—2 sts inc'd. **Row 4** With B, knit. **Row 5** With A, k1, Kfbf, k to last 3 sts, k2tog, k1—1 st inc'd. **Row 6** With A, knit.
Rep rows 3–6 eight times more—32 sts.

SHORT-ROW STRIPE SECTION 1
Short-row 1 (RS) With B, k1, kfbf, k25, w&t. **Short-row 2** With B, k to end. **Short-row 3** With A, k1, kfbf, k to 4 sts before last wrap, w&t. **Short-row 4** With A, k to end.
Rep short-rows 3 and 4 five times more, alternating B and A—46 sts.
Cont next section with A only.
Next row (RS) K1, kfbf, k to end. **Next row** K5, w&t. **Next row** K to last 3 sts, k2tog, k1. **Next row** K8, w&t. **Next row** K to end. **Next row** K12, w&t. **Next row** K to last 3 sts, k2tog, k1. **Next row** K15, w&t. **Next row** K to end. **Next row** K19, w&t. **Next row** K to last 3 sts, k2tog, k1. **Next row** K22, w&t. **Next row** K to end. **Next row** K26, w&t. **Next row** K to last 3 sts, k2tog, k1. **Next row** K to end—44 sts. **Next row** K1, kfbf, k to end. **Next row** K to end. **Next row** K1, kfbf, k to last 3 sts, k2tog, k1. **Next row** K to end. **Next row (RS)** K1, kfbf, k to end. **Next row** K to end. **Next row** K1, kfbf, k to last 3 sts, k2tog, k1—50 sts. **Next row (WS)** K5, *k2tog, k2; rep from * to last 5 sts, k5—40 sts. Cut A.

LACE SECTION
With B, work rows 1–12 of lace pat 1 four times—76 sts. Cut B.

STRIPED GARTER SECTION
Join A. **Inc row 1 (RS)** K1, kfbf, k2, *M1, k3; rep from * to last 3 sts, k3—101 sts. **Row 2** Knit. **Row 3** K1, kfbf, k to last 3 sts, k2tog, k1. **Row 4** Knit. **Row 5** K1, kfbf, k to end. **Row 6** Knit. **Row 7** K1, kfbf, k to last 3 sts, k2tog, k1. **Row 8** Knit. Rep rows 5–8 once more. With B, rep rows 5 and 6. With A, rep rows 7 and 8, then rows 5–8 once. With B, rep rows 5–8 once. With A, rep rows 5–8 once. With B, rep rows 5–8 once, then rows 5 and 6 once. With A, rep rows 7 and 8 once more. With B, rep rows 5–8 four times more. With B, rep rows 5–7 once more—141 sts. **Next row (WS)** With B, k6, *k2, k2tog; rep from * to last 7 sts, k7—109 sts. Cut B.

LACE SECTION
With A, work rows 1–12 of Lace Pat 2 three times—136 sts. Cut A.

GARTER SECTION
Join B. **Row 1 (RS)** K1, kfbf, k2, *M1, k3; rep from * to last 3 sts, k3—181 sts. **Row 2** Knit. **Row 3** K1, kfbf, k to last 3 sts, k2tog, k1. **Row 4** Knit. **Row 5** K1, kfbf, k to end. **Row 6** Knit. **Row 7** K1, kfbf, k to last 3 sts, k2tog, k1. **Row 8** Knit. Rep rows 5–8 seven times more, then rows 5–7 once more—209 sts. **Next row (WS)** K5, *k2tog, k2; rep from * to last 4 sts, k4—159 sts. Cut B.

LACE SECTION
With A, work rows 1–12 of Lace Pat 1 three times—186 sts. Cut A.

STRIPED GARTER SECTION
Join B. **Inc row 1 (RS)** K1, kfbf, k5, *M1, k3; rep from * to last 3 sts, M1, k3—247 sts. **Row 2** Knit. **Row 3** K1, kfbf, k to last 3 sts, k2tog, k1. **Row 4** Knit. **Row 5** K1, kfbf, k to end. **Row 6** Knit. **Row 7** K1, kfbf, k to last 3 sts, k2tog, k1. **Row 8** Knit. With B, rep rows 5–8 three times more. With A, rep rows 5 and 6 once more. With B, rep rows 7 and 8 once more, and then rep rows 5–8 once more. With A, rep rows 5–8 once more. With B, rep rows 5–8 once more. With A, rep rows 5–8 once more, and then 5 and 6 once more. With B, rep rows 7 and 8 once more. With A, rep rows 5–8 twice more, then 5–7 once more—287 sts. **Next row (WS)** With A, k5, *k2tog, k2; rep from * to last 6 sts, k2tog, k4—217 sts. Cut A.

LACE SECTION
With A, work rows 1–12 of lace pattern 1 three times—244 sts. Cut A.

STRIPED GARTER SECTION
Join B. **Row 1 (RS)** K1, kfbf, k5, *M1, k3; rep from * to last 3 sts, k3—328 sts. **Row 2** Knit. **Row 3** K1, kfbf, k to last 3 sts, k2tog, k1. **Row 4** Knit. **Row 5** K1, kfbf, k to end. **Row 6** Knit. **Row 7** K1, kfbf, k to last 3 sts, k2tog, k1. **Row 8** Knit. With B, rep rows 5–8 once more. With A, rep rows 5–8 twice more. With B, rep rows 5–8 twice more. With A, rep rows 5–8 once more. With B, rep row 5 once more—352 sts. Bind off knitwise on WS.

FINISHING
Weave in ends. Block to measurements. ■

7 Coral Sunrise Shawl

Shown on page 24.

●●○○

Finished Measurements
- Width along top edge 70"/178cm
- Length from top edge to tip 38"/76cm

Materials
Noro/KFI *Geshi* 7oz/200g skeins each approx 656yd/600m (viscose/cotton/silk/wool)
- 2 skeins in #8 Unzen
- Size 6 (4mm) circular needle, 24"/60cm long OR SIZE TO OBTAIN GAUGE
- Size G-6 (4mm) crochet hook and scrap yarn for provisional cast-on
- Stitch markers

Gauge
20 sts and 30 rows = 4"/10 cm over sand st using size 6 (4mm) needles. TAKE TIME TO CHECK GAUGE.

Provisional Cast On
Using scrap yarn and crochet hook, ch the number of sts to cast on plus a few extra. Cut a tail and pull tail through last chain. With knitting needle and yarn, pick up and knit the stated number of sts through the "purl bumps" on back of chain. To remove scrap yarn chain, when instructed, pull out tail from last crochet stitch. Gently and slowly pull on the tail to unravel the crochet stitches, carefully placing each released knit stitch on a needle.

Sand Stitch (an even number of sts)
Row 1 (RS) *K1, p1; rep from * to end. **Row 2** Purl. **Row 3** *P1, k1; rep from * to end. **Row 4** Purl. Rep rows 1–4 for sand st.

Vine Lace (multiple of 9 sts plus 4)
Row 1 (RS) K2, *k1, yo, k2, SKP, k2tog, k2, yo; rep from * to last 2 sts, k2. **Row 2** Purl. **Row 3** K2, *yo, k2, SKP, k2tog, k2, yo, k1; rep from * to last 2 sts, k2. **Row 4** Purl.
Rep rows 1–4 for vine lace.

SHAWL
Using provisional cast-on, cast on 240 sts. **Set-up row (WS)** P85 place marker, p to last 3 sts, place marker, k3 for garter stitch upper edge. **Row 1** K3, sl marker, SKP, work in sand stitch to next marker, work vine lace stitch to end. **Row 2** P to marker, sl marker, p to 2nd marker, sl marker, k3. Rep rows 1 and 2 until 3 sts rem, p3tog. Cut yarn and pull through to fasten off.

FINISHING
Undo chain, carefully placing open loops on needle. Rejoin main yarn and bind off. ■

8 Earthenware

Shown on page 28.

●●●○

Finished Measurements
- Width 41¼"/105cm
- Length 54¾"/139cm

Materials
Noro/KFI *Silk Garden Lite* 1¾/50g balls, each approx 137yd/125m (silk/mohair/wool)
- 8 balls each in #2083 Yokote (MC–dark tone) and #2094 Kashiwa (CC–light tone)
- Sizes G-6 and H-8 (4 and 5mm) crochet hooks, OR SIZE TO OBTAIN GAUGE

Gauges
- 4 rnds of granny square = 4¼ x 4¼"/10.5 x 10.5cm using H-8 (5mm) hook.
- 14 rnds granny square = 13½ x 13½"/34 x 34cm using H-8 (5mm) hook.

TAKE TIME TO CHECK GAUGES.

Notes
1) Two yarns (colors) are worked in each round. When changing colors, hold color not in use at WS of work.
2) Motif is worked back and forth in rows but joined to form rounds.
3) Ch 3 and ch 4 at beg of rnds counts as dc and tr throughout.

GRANNY SQUARE
With larger hook and MC, ch 3. Join with sl st to first ch to form a ring.
Rnd 1 (RS) With MC, ch 3 (counts as dc here and throughout), work into ring as foll: work (1 dc, ch 4, 2 dc), ch 2, drop MC to WS, join CC, ch 2, work (2 dc, ch 4, 2 dc), ch 1, join with sl st to top of beg ch-3. Turn— 4 dc groups and 4 corner spaces.
Rnd 2 (WS) With CC, ch 4, 2 dc in corner sp, dc in next 2 dc, (2 dc, 1 tr, 2 dc) in corner sp, dc in next 2 dc, (2 dc, 1 tr) in corner sp, drop CC to back, change to MC, 2 dc in same corner sp, dc in each 2 dc, (2 dc, 1 tr, 2 dc) in corner ch-sp, dc in next 2 dc, 2 dc in beg corner sp, join with sl st to top of beg ch-4 (corner). Turn – 24 dc and 4 tr.
Rnd 3 (Ch 3, dc) in same st as joining, ch 2, skip 2 dc, 1 dc in next 2 dc, ch 2, skip 2 dc, (2 dc, 1 tr, 2 dc) in corner tr st, ch 2, skip 2 dc, dc in next 2 dc, ch 2, 2 dc in corner tr st, drop MC to WS, change to CC, (1 tr, 2 dc) in same corner tr st, ch 2, skip 2 dc, dc in next 2 dc, ch 2, skip 2 dc, (2 dc, 1 tr, 2 dc) in corner st, ch 2, skip 2 dc, dc in next 2 dc, ch 2, skip 2 dc, (2 dc, 1 tr) in beg corner, join with sl st to top of beg ch-3. Turn—24 dc, 4 tr, 8 ch-sps.
Rnd 4 Sl st into next st (tr), ch 4, 2 dc in same st as joining (corner), [dc in next 2 dc, 2 dc in ch-sp] twice, dc in next 2 dc, (2 dc, 1 tr, 2 dc) in corner tr st, [dc in next 2 dc, 2 dc in ch-sp] twice, dc in next 2 dc, (2 dc, 1 tr) in tr corner st, drop CC to WS, change to MC, 2 dc in same corner st, [dc in next 2 dc, 2 dc in ch-sp] twice, dc in next 2 dc, (2 dc, 1 tr, 2 dc) in corner tr st, [dc in next 2 dc, 2 dc in ch-sp] twice, dc in next 2 dc, end 2 dc in base of beg corner st, join with sl st in top of beg ch-4. Turn—60 sts (56 dc, 4 tr).
Rnd 5 Ch 3, 1 dc in same st (corner), [ch 2, skip 2 dc, dc in next 2 dc] 3 times, ch 2, skip 2 dc, (2 dc, 1 tr, 2 dc) in corner tr st, [ch 2, skip 2 dc, dc in next 2 dc] 3 times, ch 2, skip 2 dc, 2 dc in corner tr st, drop MC to WS, change to CC, (1 tr, 2 dc) in same corner tr, [ch 2, skip 2 dc, dc in next 2 dc] 3 times, ch 2, skip 2 dc, (2 dc, 1 tr, 2 dc) in corner tr st, [ch 2, skip 2 dc, dc in next 2 dc] 3 times, ch 2, (2 dc, 1 tr) in beg tr st, join with sl st to top of beg ch-3. Turn—44 sts, 16 ch-sps.
Rnd 6 Rep rnd 4, working each set of [dc in next 2 dc, 2 dc in ch-sp] 4 times. Turn—92 sts (88 dc, 4 tr).
Rnd 7 Rep rnd 5 working each set of [ch 2, skip 2 dc, dc in next 2 dc] 5 times. Turn—60 sts, 24 ch-sps.
Rnd 8 Rep rnd 4, working each set of [dc in next 2 dc, 2 dc in ch-sp] 6 times. Turn—124 sts (120 dc, 4 tr).
Rnd 9 Rep rnd 5 working each set of [ch 2, skip 2 dc, dc in next 2 dc] 7 times. Turn—76 sts, 32 ch-sps.
Rnd 10 Rep rnd 4, working each set of [dc in next 2 dc, 2 dc in ch-sp] 8 times.
Rnd 11 Rep rnd 5 working each set of

[ch 2, skip 2 dc, dc in next 2 dc] 9 times. Turn—92 sts, 40 ch-sps.
Rnd 12 Rep rnd 4, working each set of [dc in next 2 dc, 2 dc in ch-sp] 10 times. Turn—188 sts (184 dc, 4 tr).
Rnd 13 Rep rnd 5 working each set of [ch 2, skip 2 dc, dc in next 2 dc] 11 times. Turn—108 sts, 48 ch-sps.
Rnd 14 (last rnd) Sl st into next st (tr), ch 3 (counts as dc), 2 hdc in same st as joining (corner), [hdc in next 2 dc, 2 hdc in ch-sp] 12 times, hdc in next 2 dc, (2 hdc, 1dc, 2hdc) in corner tr st, [hdc in next 2 dc, 2 hdc in ch-sp] 12 times, hdc in next 2 dc, (2 hdc, 1dc) in corner tr st, drop CC to WS, change to MC, 2 hdc in same corner st, [hdc in next 2 dc, 2 hdc in ch-sp] 12 times, hdc in next 2 dc, (2 hdc, 1dc, 2 hdc) in corner tr st, [hdc in next 2 dc, 2 hdc in ch-sp] 8 times, hdc in next 2 dc, 2 hdc in beg corner tr st, join with sl st in top of beg ch-3.
Fasten off leaving a long tail.

AFGHAN
Make 12 granny squares marking the triangle side that has the dark tone.

FINISHING
Lay motif squares using assembly diagram matching dark and light triangles. Join motifs using mattress stitch.

EDGING
With smaller hook and RS facing, join MC dark to bottom left corner to center dc st of hdc group.
Rnd 1 (RS) Ch 3, 2 hdc in same st, *1 hdc in each hdc and space between motifs to corner dc, (2 hdc, 1 dc, 2 hdc) in corner dc st; rep from * around, end last rep with 2 hdc in beg corner st. Join with sl st to top of beg ch 3. Fasten off.
Rnd 2 (RS) With CC, attached yarn to bottom right corner and work corner dc with (2 hdc, 1 dc, 2 hdc) and 1 hdc in each hdc. Fasten off. ■

9 Marine Mirage

Shown on page 30.

●●●○

Finished Measurements
- Width 40.5"/103cm
- Length 51.5"/131cm
-

Materials
Noro/KFI *Tabi* 5.3oz/150g balls each approx 410yd/375m (wool/polyamide) 6 balls in #12 Munakata
- Sizes H-8 and I-9 (5 and 5.5mm) crochet hooks, OR SIZE TO OBTAIN GAUGE

Gauges
- 6 rnds of small granny square = approx 6.5 x 6.5"/16.5 x 16.5cm.
- 12 rnds of large granny square = approx 11.5 x 11.5"/32 x 32cm.
- 15 dc and 8 rows = 4"/10cm using size I-9 (5.5mm) hook

TAKE TIME TO CHECK GAUGES.

Notes
1) Chains at the beginning of rounds count as a stitch unless otherwise specified.
2) If desired, mark corner triple crochet sts to indicate increase at corners.

Small Granny Square (make 24)
With larger hook, ch 5 and join with sl st to make a ring.
Rnd 1 (RS) Ch 4 (counts as tr here and throughout), into ring work 3 dc, [1 tr, 3 dc] 3 times. Join with sl st to top of beg ch-4. Mark corner tr sts, if desired. Do *not* turn—16 sts [4 corner tr and 3 dc each side]. **Rnd 2** Ch 4, 2 dc in same st as joining, *dc in each dc to corner tr **, in corner tr work (2 hdc, tr, 2 hdc); rep from * around ending last rep at **, 2 dc in base of beg ch-4 corner. Join with sl st to top of the beg ch-4. Do *not* turn—32 sts (4 corner tr and 7 dc per side) **Note:** 16 sts inc'd each rnd (4 sts each side).
Rnd 3 Ch 4, 2 dc in same st as joining, *dc in each dc to corner tr**, in corner tr work (2 hdc, tr, 2 hdc); rep from * around ending last rep at **, 2 dc in base of beg ch-4 corner. Join with sl st to top of the beg ch-4. Turn—48 sts (4 corner tr and 11 dc per side). **Rnd 4** Ch 4, 2 dc in same st as joining, *dc in each dc to corner tr**, in corner tr work (2 hdc, tr, 2 hdc); rep from * around ending last rep at **, 2 dc in base of beg ch-4 corner. Join with sl st to top of the beg ch-4. Do *not* turn—64 sts (4 corner tr and 15 dc per side). **Rnd 5** Ch 4, 2 dc in same st as joining, *Dc in each dc to corner tr**, in corner tr work (2 hdc, tr, 2 hdc); rep from * around ending last rep at **, 2 dc in base of beg ch-4 corner. Join with sl st to top of the beg ch-4. Do *not* turn—80 sts [4 corner tr and 19 dc per side]
Rnd 6 Ch 4, 2 dc in same st as joining, *Dc in each dc to corner tr**, in corner tr work (2 hdc, tr, 2 hdc); rep from * around ending last rep at **, 2 dc in base of beg ch-4 corner. Join with sl st to top of the beg ch-4. Fasten off—96 sts (4 corner tr and 23 dc per side).

Large Granny Square (make 6)
Rep rnds 1–6 of small granny square. At end of rnd 6, do *not* fasten off; turn.
Rnds 7–9 Rep rnds 4–6 in pat as established. Turn—44 sts (4 corner tr and 35 dc per side). **Rnds 10–12** Rep rnds 4–6 in pat as established. Fasten off—192 sts (4 corner tr and 47 dc per side).

AFGHAN
Make 24 small granny squares, 6 large granny squares

FINISHING
Lay out granny motifs using placement diagram. Using mattress stitch, sew together granny squares to form blanket.

EDGING
Rnd 1 With RS facing, attach yarn at any corner tr st, ch 4, 2 dc in same st, *dc in each dc and space between motifs around to corner, (2 dc, 1 tr, 2 hdc) in corner tr, rep from * around to beg corner, end last rep with 2 dc in beg corner tr. Join with sl st in top of beg ch-4. Fasten off.
Rnd 2 With RS facing, attach yarn at any corner tr st, Ch 1, in same st, *4 sc in tr for corner, ch 1, skip 1 dc, sc in next dc; rep from * to next corner, ch 1; rep from * around. Sl st in first sc of beg corner 4-sc group. Fasten off.
Carefully steam block on wrong side. ■

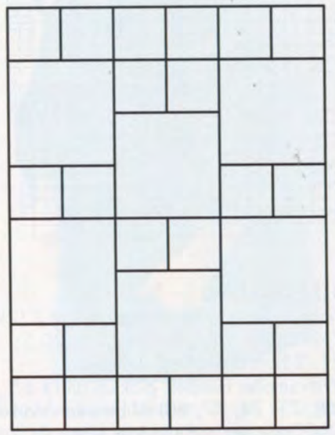

10 Calmness

Sized for Small–Large (1X–2X) and shown in size Small–Large on page 32.

●●●○

Finished Measurements
- Bust 43 (52)"/109 (132)cm
- Length 27½ (28½)"/70 (72.5)cm

Materials
Noro/KFI *Tsubame* 7oz/200g balls, each approx 656yd/600m (silk/wool/polyamide)
- 2 (3) balls in #5 Morioka
- One pair each sizes 4 and 6 (3.5 and 4 mm) needles OR SIZE TO OBTAIN GAUGE
- Stitch markers, small st holder or safety pin

Gauge
20 sts and 26 rows = 4"/10cm over chart pat using larger needles.
TAKE TIME TO CHECK GAUGE.

BACK
With smaller needles, cast on 105 (129) sts. **Row 1 (RS)** K1tbl, *p1, k1tbl; rep from * to end. **Row 2 (WS)** P1, *k1, p1; rep from * to end. Rep these 2 rows for twisted rib until piece measures 4"/10cm from beg. Change to larger needles.

BEG CHART PAT (see next page)
Row 1 (RS) Knit. **Row 2 (WS)** P3 (0), k3 (1), p8, *k3, p3, k3, p8*; rep between *'s 4 (6) times more, end k3 (1), p3 (0). **Note:** Row 2 is the WS set-up row for size Small/Medium or size 1x/2x chart. Cont to foll chart for chosen size. **Row 3 (RS)** Work the first 6 (1) sts of chart row 3, work the 17-st rep 5 (7) times, work the last 14 (9) sts of chart. **Rows 4–8** Cont to foll charts as established.
Inc row 9 (RS) K1 (p1), M1R, work chart row 9 to last st, M1L, k1 (p1)—107 (131) sts. Place markers each side of last row to mark end of the side slit. Cont to foll chart through riw 26, then rep rows 11–26 (blue box on chart) until piece measures 17½ (17)"/44.5 (43)cm from beg.

ARMHOLE SHAPING
Bind off 5 (7) sts at beg of next 2 rows, 2 sts at beg of next 4 (8) rows. Dec 1 st each side every other row 9 (11) times —71 (79) sts. Work even until armhole measures 9 (10½)"/23 (27)cm.

SHOULDER SHAPING
Bind off 6 sts at beg of next 4 rows, 5 (7) sts at beg of next 2 rows.
Bind off rem 37 (41) sts for back neck.

FRONT
Work same as back until armhole measures 2 (2½)"/5 (6.5)cm. Place marker at center st on the last WS row.

V-NECK SHAPING
Next row (RS) Cont armhole shaping, work to 3 sts before center st, SKP, k1, place center st on small st holder or safety pin, join a 2nd ball of yarn and k1, k2tog, work to end (cont with armhole shaping at end of row).
Cont to dec 1 st at neck edge (every alternate 2nd and 4th row) a total of 17 (19) times more—17 (19) sts rem each side, AT SAME TIME, when armhole measures same as back, shape shoulder by binding off 6 sts from each shoulder edge twice, 5 (7) sts once.

FINISHING
Sew left shoulder seam.

NECKBAND
With RS facing and smaller needles, pick up and k 37 (41) sts along back neck edge, 45 (51) sts along left neck edge, pm, k1 st from safety pin at center v-neck, pick up and k 45 (51) sts along right neck edge—128 (144) sts. **Row 1 (WS)** P1, *k1, p1; rep from * to 2 sts before center marked st, SKP, p1, k2tog, **p1, k1; rep from ** to end. **Row 2 (RS)** Work in k1, p1 twisred rib to 2 sts before center marked st, p2tog, k1 tbl, p2tog, work in twisted rib to end. Rep these 2 rows for 9 rows more. Bind off in rib. Sew right shoulder and neckband seam.

ARMHOLE TRIMS
With RS facing and smaller needles, pick up and k 114 (134) sts evenly around armhole edge. Work in twisted rib for 9

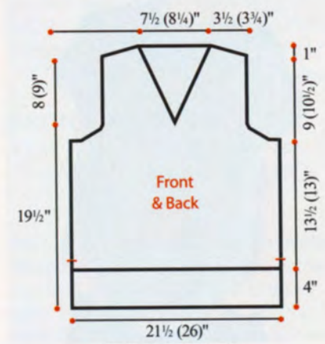

Inch Measurements

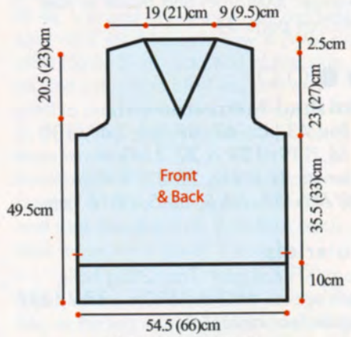

Metric Measurements

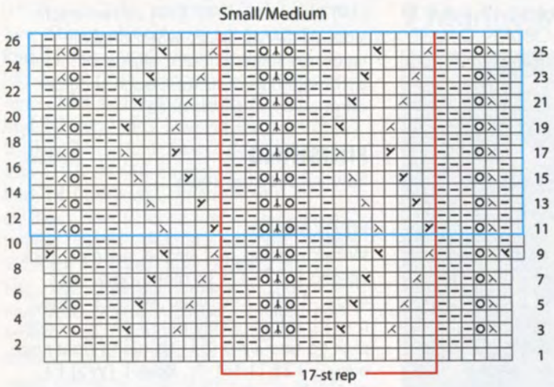

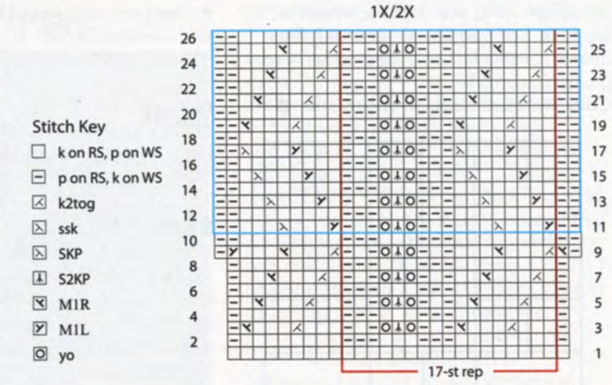

Stitch Key
- k on RS, p on WS
- p on RS, k on WS
- k2tog
- ssk
- SKP
- S2KP
- M1R
- M1L
- yo

rows. Bind off in rib. Sew side seams up to the markers, leaving the 5"/13cm free for the side slits. Reinforce with extra sts at the top of the slits for durability in wear. ■

11 Unwind

Sized for Small (Medium, Large, X-Large, XXX-Large) and shown in size Small on page 34.

●●○○

Finished Measurements
- Bust 43 (45, 47, 49, 51, 54)"/109 (114, 119, 124, 130, 137)cm
- Length 22 (22½, 23 23, 23½, 24)"/56 (57, 58.5, 58.5, 60, 61)cm

Materials
Noro/KFI *Kakigori* 7oz/200g balls, each approx 660yds/600m (cotton/silk/viscose/polyamide)
- 2 balls in #13 Fukuyama
- One pair each sizes 6 and 8 (4 and 5 mm) needles OR SIZE TO OBTAIN GAUGE
- Clip-on st markers

Gauge
18 sts and 26 rows to 4"/10cm over St st using larger needles.
TAKE TIME TO CHECK GAUGE.

BACK
With smaller needles, cast on 98 (101, 107, 110, 116, 122) sts. Knit 4 rows. Change to larger needles.

BEG PATTERN STITCH
****Row 1 (RS)** Purl. **Row 2** P1, p each st wrapping yarn twice around needle, end p1. **Row 3** K1, *sl next 3 sts to RH needle dropping extra loops, then sl these same 3 sts back to LH needle and k3tog (leaving sts on LH needle), yo, k3tog the same sts again; rep from * to last st, end k1. **Row 4 (WS)** Knit**. **Row 5** Knit. **Row 6** Purl. **Row 7** Knit. **Row 8** Purl.
Rows 9–32 Rep (rows 1–8) 3 times.
Rows 33–36 Rep rows 1–4 once.
Next row (RS) Knit. **Next row (WS)** Purl. Rep last 2 rows for St st until piece measures 21¼ (21¾, 22¼, 22¼, 22¾, 23¼)"/54 (55, 56.5, 56.5, 58, 59)cm from beg. Change to smaller needles. Rep between **'s (rows 1–4) once more. **Next row (RS)** Purl. Bind off.

FRONT
Work same as for back.

PRE-FINISHING
Place marker at 22 (23, 26, 28, 31, 34) sts in from each shoulder edge neck opening. Sew shoulder seams up to markers for neck, leaving 12"/30.5cm between markers open for neck opening. Reinforce at neckline edges for durability.

SLEEVE TRIMS
Place markers on front and back at 7 (7½, 7¾, 8, 8½, 9)"/18 (19, 19.5, 20.5, 21, 23)cm down from shoulders.
With smaller needles, pick up and k 65 (68, 71, 74, 77, 80) sts between markers along one seamed shoulder side.
Next row (WS) Purl. **Rows 1–8** Work as for back. **Rows 9–12** Rep rows 1–4 once. **Next row (RS)** Purl. **Next row (WS)** Knit. Bind off. Rep for other sleeve trim.

FINISHING
Sew side and underarm sleeve trims. ■

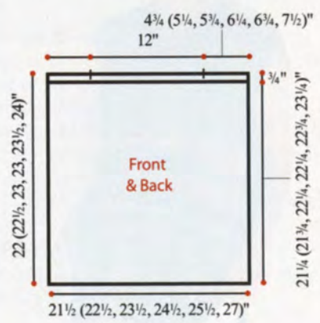

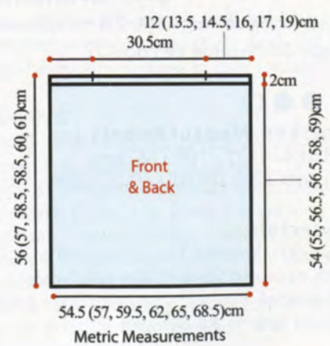

12 Mellow

Sized for Small (Medium, Large, X-Large) and shown in size Medium on page 34.

●●●○

Finished Measurements
- Lower edge 48 (50½, 53, 55)"/122 (128, 135, 140)cm
- Bust 43 (45, 47, 50)"/109 (114, 119, 127)cm
- Length 24¼ (24¾, 25, 25½)"/61.5 (63, 63.5, 65)cm
- Upper arm 13½ (14½, 15, 16)"/34 (37, 38, 41) cm

Materials
Noro/KFI *Sonata*, 3½oz/100g skeins (each approx 393yd/359m) of (cotton/viscose/silk/polyamide)
- 3 (4, 4, 4) skeins in #25 Pacific
- One pair each sizes 3 and 5 (3.25 and 3.75 mm) needles OR SIZE TO OBTAIN GAUGE
- Clip-on st markers

Gauge
22 sts and 30 rows to 4"/10 cm over St st using larger needles.
TAKE TIME TO CHECK GAUGE.

Note
Pattern blocks are worked with purl segments that are placed within the pattern rows while working side seam shaping.

BACK
With larger needles, cast on 133 (139, 145, 151) sts. **Row 1 (RS)** Knit.
Row 2 and all foll WS rows to Row 42 K5, purl to last 5 sts, k5.
Rows 3–16 Rep last 2 rows 7 times.
Row 17 (RS) K22 (25, 28, 31), [p9, k31] twice, p9, k22 (25, 28, 31).
Dec row 19 K5, k2tog, k14 (17, 20, 23), [p11, k29] twice, p11, k14 (17, 20, 23), k2tog, k5—131 (137, 143, 149) sts. **Row 21** K19 (22, 25, 28), [p13, k27] twice, p13, k19 (22, 25, 28). **Row 23** K18 (21, 24, 27), [p15 , k25] twice, p15, k18 (21, 24, 27).
Row 25 K17 (20, 23, 26), [p17, k23] twice, p17, k17 (20, 23, 26).
Row 27 Rep row 25.
Row 29 Rep row 25.
Row 31 Rep row 25.
Dec row 33 K5, k2tog, work in established pats to last 7 sts, k2tog, k5—129 (135, 141, 147) sts.
Row 35 K17 (20, 23, 26), [p15, k25] twice, p15, k17 (20, 23, 26).
Row 37 K18 (21, 24, 27), [p13, k27] twice, p13, k18 (21, 24, 27).
Row 39 K19 (22, 25, 28), [p11, k29] twice, p11, k19 (22, 25, 28).
Row 41 K20 (23, 26, 29), [p9, k31] twice, p9, k20 (23, 26, 29).
Row 42 Rep row 2.
This is the end of the side slit.
Note: Discontinue the 5-st garter edges and work WS rows as purl all sts.
Row 43 Knit. **Row 44** Purl.
Row 45 Knit. **Row 46** Purl.
Dec row 47 K2tog, k39 (42, 45, 48), p7, k33, p7, k39 (42, 45, 48), k2tog—127 (133, 139, 145) sts.
Row 48 and all foll WS rows Purl.
Row 49 K39 (42, 45, 48), p9, k31, p9, k39 (42, 45, 48). **Row 51** K38 (41, 44, 47), p11, k29, p11, k38 (41, 44, 47). Row 53 K37 (40, 43, 46), p13, k27, p13, k37 (40, 43, 46).
Row 54 Purl.
Rows 55–60 Rep rows 53 and 54 three times. **Row 61** Rep row 51.
Dec Row 62 (WS) P2tog, p to last 2 sts, p2tog—125 (131, 137, 143) sts.
Row 63 K38 (41, 44, 47), p9, k31, p9, k38 (41, 44, 47). **Row 65** K39 (42, 45, 48), p7, k33, p7, k39 (42, 45, 48).
Row 67 Knit. **Row 68** Purl.
Rows 69 and 70 Rep rows 67 and 68.
Row 71 K13 (16, 19, 22), [p5, k42] twice, p5, k13 (16, 19, 22).
Row 73 K12 (15, 18, 21), [p7, k40] twice, p7, k12 (15, 18, 21).
Row 75 K11 (14, 17, 20), [p9, k38] twice, p9, k11 (14, 17, 20).
Row 76 Purl. **Row 77** Rep row 75.
Dec row 78 P2tog, p to last 2 sts, p2tog—123 (129, 135, 141) sts.
Row 79 K10 (13, 16, 19), [p9, k38] twice, p9, k10 (13, 16, 19). **Row 80** Purl. **Row 81** K11 (14, 17, 20), [p7, k40] twice, p7, k11 (14, 17, 20). **Row 83** K12 (15, 18, 21), [p5, k42] twice, p5, k12 (15, 18, 21).
Row 85 Knit. **Row 86** Purl.
The rem of piece will be worked in St st, AT SAME TIME, dec'ing 1 st each side after 4 more rows are worked (row 91), then every 15th row (row 106) once more—119 (125, 131, 137) sts.
Work even for 8 rows more.
Place a clip-on st marker each side of last row to mark the beg of the armhole.
Inc row (RS) K1, kfb, k to last 3 sts, kfb, k2 - 2 sts inc'd.
Rep inc row every 18th (18th, 20th, 20th) row twice more—25 (131, 137, 143) sts.
Work even until piece measures 6¾ (7¼, 7½, 8)"/17 (18.5, 19, 20.5)cm from markers.

SHOULDER SHAPING
Bind off 5 sts at beg of next 2 (6, 12, 12) rows, 4 sts at beg of the next 10 (6, 0, 0) rows. Pm to mark the center 57 (59, 59, 61) sts on the last WS row.
Next row (RS) Bind off 4 (4, 4, 5) sts, k to the first neck marker; join a 2nd ball of yarn and bind off center 57 (59, 59, 61) sts, k to end. **Next row (WS)** Bind off 4 (4, 4, 5) sts, purl to last 2 sts of first side, p2tog; on 2nd side, p2tog, p to end. Bind off rem 4 (4, 4, 5) sts each side.

FRONT
Work same as back to the shoulder shaping. On the last WS row, pm to mark center 39 (41, 41, 43) sts.

NECK AND SHOULDER SHAPING
Row 1 (RS) Bind off 5 sts, k to center marked sts, join a 2nd ball of yarn and bind off center 39 (41, 41, 43) sts, k to end. **Row 2 (WS)** Bind off 5 sts, p to end of first side; on 2nd side, bind off 3 sts, p to end. **Row 3 (RS)** Bind off 4 (5, 5, 5) sts, k to end of first side; on 2nd side, bind off 3 sts, k to end. **Row 4 (WS)** Bind off 4 (5, 5, 5) sts, p to end of first side; on 2nd side, bind off 2 sts, p to end.
Cont to shape shoulders, binding off 4 (5, 5, 5) sts from each shoulder 6 (2, 5, 6) times more, then 0 (4, 4, 0) sts 0 (5, 2, 0) times, AT SAME TIME, cont to shape neck binding off 2 sts from right neck edge on next row, then bind off 2 sts from each neck edge twice more, 1 st once.

SLEEVES
Beg at the top edge of sleeve, with larger needles, cast on 76 (80, 84, 88) sts.

Knit 1 row, purl 1. Cont in St st for 6 rows more. **Dec row (RS)** K2, SKP, k to last 4 sts, k2tog, k2. Rep dec row every 10th row 4 times more —66 (70, 74, 78) sts. Work even until piece measures approx 9"/23cm from beg.

CUFF DETAIL
Row 1 (RS) Knit. **Row 2 (WS)** K4, p to last 4 sts, k4. Rep the last 2 rows for 16 rows more. Bind off.

FINISHING
Sew right shoulder seam.

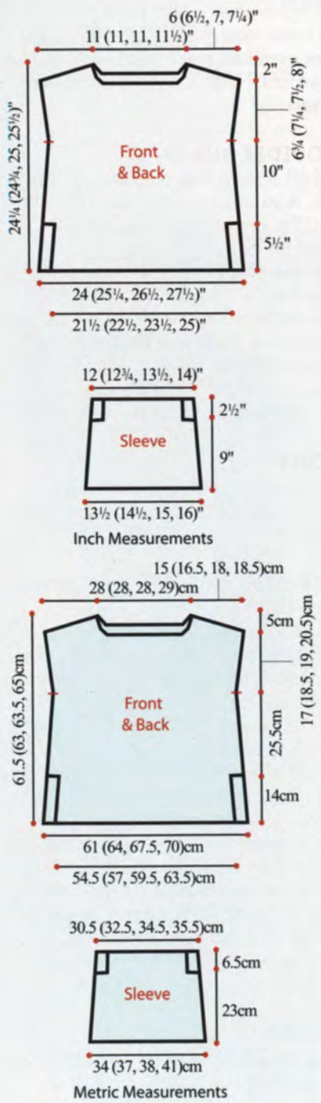

NECKBAND
With RS facing and smaller needles, pick up and k14 sts from shaped left front neck edge, 39 (41, 41, 43) sts from center front neck, 14 sts from shaped right front edge, 59 (61, 61, 63) sts from back neck edge—126 (130, 130, 134) sts. Work in k1, p1 rib for 8 rows. Bind off in rib.
Sew other shoulder seam.
Center sleeve tops at the shoulder seams and use clip-on markers to set sleeves in place between the armhole markers. Sew sleeves into armholes. Sew sleeve seams. Sew side seams leaving the last 5½"/14cm open for the side slits. ■

13 Becalm

Sized for Small (Medium, Large) and shown in size Small on page 35.

●●●○

Finished Measurements
- Bust 44½ (46, 48)"/113 (117, 122)cm
- Length 23½(23¾, 24¼)"/59.5 (60, 61.5)cm

Materials
Noro/KFI Enka 7oz/200g balls, each approx 550yd/500m (cotton/silk/wool/polyamide)
- 2 (2, 3) balls in #3 Nara
- One pair each sizes 6 and 7 (4 and 4.5 mm) needles OR SIZE TO OBTAIN GAUGE
- Clip-on st markers

Gauge
18 sts and 26 rows to 4"/10 cm over St st using larger needles.
TAKE TIME TO CHECK GAUGE.

BACK
With smaller needles, cast on 100 (104, 108) sts. **Row 1 (RS)** *K1, p1; rep from * to end. Rpe last row for 5 rows more. Change to larger needles.

BEG CHART PAT
Row 1 (RS) K33 (35, 37), pm, k22 (for row 1 of chart, pm, 45 (47, 49). Cont to foll chart in this way, with sts each side of 22-st panel in St st, until piece measures 13½"/34 cm from beg.

ARMHOLE SHAPING
Note Work first 11 sts foll chart Panel B, the last 11 sts foll chart Panel A, and work inc's for the armhole shaping inside of these charts.
Inc row (RS) Work 11 sts foll row 1 of Panel B, place marker, kfb (for an inc), work as established to the last 13 sts, kfb (for an inc), k1, pm, work 11 sts foll row 11 of Pnel A—2 sts inc'd.
Rep inc row with charts in place in this way, every 6th row 7 (8, 8) times more—116 (122, 126) sts.
Work even for 7 (3, 7) rows more.

SHOULDER SHAPING
Bind off 5 sts at beg of next 4 rows, 4 sts at beg of next 2 rows, 5 sts at beg of next 4 rows—68 (74, 78) sts.
Mark center 30 (30, 32) sts.

NECK SHAPING
Next row (RS) Bind off 4 sts, work to center marked sts, bind off center 30 (30, 32) sts, work to end. Working both sides at once, cont to bind off 4 sts at beg of

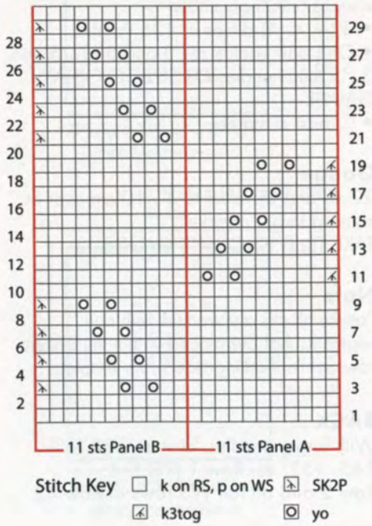

next WS row, then bind off 5 (6, 7) sts from each shoulder edge once, 5 (7, 7) sts once AT SAME TIME, bind off 2 sts from each neck edge twice, 1 st once.

FRONT
Work as for back up to the shoulder shaping. Pm to mark the center 24 (24, 26) sts on the last WS row.

NECK AND SHOULDER SHAPING
Next row (RS) Bind off 5 sts, k to center marked sts, join a 2nd ball of yarn and bind off center 24 (24, 26) sts, work to end. Cont to shape neck by dec'ing 1 st at each neck edge every row on next 8 rows, AT SAME TIME, bind off 5 sts at beg of next WS row, then bind off 5 sts from each shoulder edge once, 4 sts once, 5 sts twice, 4 sts once, then 5 (6, 7) sts once and 5 (7, 7) sts once.

FINISHING
NECKBAND
Sew right shoulder seam. With smaller needles, pick up and k13 sts from shaped front neck edge, 24 (24, 26) sts from center front neck edge, 13 sts from shaped front neck edge, 42 (42, 44) sts from back neck edge—92 (92, 96) sts. [Purl 1 row, knit 1 row] 5 times. Bind off. Sew left shoulder and neckband seam.

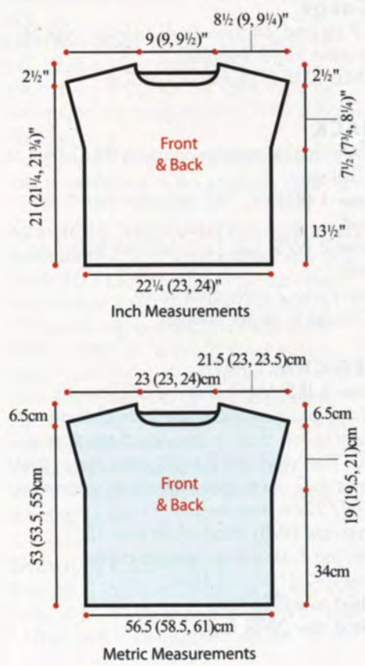

ARMHOLE TRIMS
With RS facing and smaller needles, pick up and k70 (74, 80) sts along armhole edge. Work in k1, p1 rib for 4 rows. Bind off in rib. Sew side seams. ■

14 Repose

Sized for Small (Medium/Large, X-Large/XX-Large) and shown in size Small on page 36.

●●●○

Finished Measurements
- Lower edge 55 (56, 58)"/140 (142, 148)cm
- Bust 46 (47, 49)"/117 (119, 124.5)cm
- Length 25¾ (26¼, 26¾)"/65 (66.5, 67.5)cm
- Upper arm 13½ (14½, 15½)"/34 (37, 39)cm

Materials
Noro/KFI *Geshi* 7oz/200g skeins each approx 656yd/600m (viscose/cotton/silk/wool)
- 2 (2, 3) skeins in #25 Shizuoka
- One pair each sizes 4 and 6 (3.5 and 4 mm) needles OR SIZE TO OBTAIN GAUGE
- Clip-on st markers and stitch holders

Gauge
20 sts and 28 rows to 4"/10 cm over St st using larger needles.
TAKE TIME TO CHECK GAUGE.

Note
Font and back are made in 3 separate pieces and seamed vertically to create the staggered striping effect of the yarn.

BACK CENTER PANEL
With larger needles, cast on 56 sts.

BEG CHART PAT
Row 1 (RS) Knit. **Row 2 (WS)** Purl.
Row 3 (RS) Work first 4 sts of chart, work 4-st rep 12 times, work last 4 sts of chart.
Rows 4–14 Work foll chart as set up.
Rep rows 3–14 of chart (blue box on chart) until piece measures approx 8¾"/22cm from beg and there are 62 rows from beg. Place clip-on st markers each side of last row worked (to match the shaped sides later). Work even for 58 rows from last markers. Place markers each side of last row worked to indicate end of side seam. Work even for 48 (50, 54) rows from last placed markers or for 6¾ (7¼, 7¾)"/17 (18.5, 19.5)cm.

NECK SHAPING
Next row (RS) Work 16 sts, place center 24 sts on st holder, join a 2nd ball of yarn and work to end. Working both sides at once, dec 1 st at each neck edge *every* row 9 times—7 sts each side. Work 2 rows even.

SHOULDER SHAPING
Bind off 3 sts from each shoulder edge once, then 4 sts once.

RIGHT BACK
With larger needles, cast on 43 (45, 47) sts.
Row 1 (RS) Knit. **Row 2 (WS)** Purl. Rep last 2 rows (for St st) for 60 rows more or to measure approx 8¾"/22cm. Place clip-on st marker each side of last row worked.

SHAPE OUTER EDGE
Dec row (RS) K2tog, k to end. Rep dec row every 6th row 5 times then every 4th row 5 times—32 (34, 36) sts. Work even for 7 rows more. Place a clip-on st marker each side of the last row worked to indicate the end of the side seam.

ARMHOLE INCREASING
Next inc row (RS) K1, kfb, k to end.
Rep inc row every 10th row 4 (4, 5) times more—37 (39, 42) sts. Work even for 7 (9, 3) rows more.

SHOULDER SHAPING
Bind off 6 sts at beg of next 2 (4, 7) RS rows and 5 sts at beg of next 5 (3, 0) RS rows.

LEFT BACK
Work as for right back for 8¾"/22cm. Place clip-on st marker each side of last row worked.

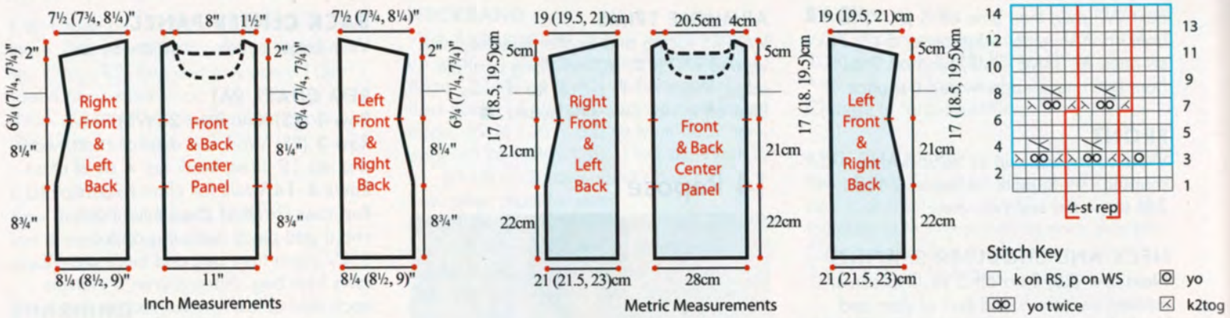

SHAPE OUTER EDGE

Dec row (RS) K to last 2 sts, k2tog.
Rep dec row every 6th row 5 times, then every 4th row 5 times—32 (34, 36) sts.
Work even for 7 rows more. Place a clip-on st marker each side of last row worked to indicate the end of the side seam.

ARMHOLE INCREASING

Inc row (RS) K to last 3 sts, kfb, k1.
Rep inc row every 10th row 4 (4, 5) times more—37 (39, 42) sts. Work even for 7 (9, 3) rows more.

SHOULDER SHAPING

Bind off 6 sts at beg of next 2 (4, 7) WS rows, 5 sts at beg of next 5 (3, 0) WS rows.

FRONT CENTER PANEL

Work as for back center panel, including placing the 2 sets of markers, until there are 42 (44, 48) rows worked even from the 2nd set of placed markers.

NECK SHAPING

Next row (RS) Work 18 sts, place center 20 sts on a st holder, join a 2nd ball of yarn and work to end. Working both sides at once, cont to shape neck binding off 3 sts from each neck edge once, 2 sts twice, 1 st 4 times—7 sts rem each side. When same length as center back, bind off 3 sts from each shoulder edge once, 4 sts once.

LEFT FRONT

Work same as for right back.

RIGHT FRONT

Work same as for left back.

FINISHING

Matching the markers, sew the center back and right and left sides tog to form the back piece and sew the front 3 pieces tog in same way. Sew the right shoulder seam.

NECKBAND

With RS facing and smaller needles, pick up and k 17 sts from shaped front neck edge, k20 from the center front holder, pick up and k 17 sts from shaped front neck, 46 sts from back neck—100 sts.
Row 1 (WS) Purl. **Row 2 (RS)** K2, *yo, SKP, k2tog, yo; rep from *, end k2.
Row 3 P6, * p1 tbl, p3; rep from *, end p2. Bind off. Sew left shoulder and neckband seam.

ARMHOLE TRIMS

With smaller needles, pick up and k 64 (68, 72) sts around one armhole edge. Work 3 rows as for neckband. Bind off. Work other armhole trim in same way. Leaving first 8¾"/22cm of front and back free for side slits, sew side seams. ■

15 Quietude

Sized for Small/Medium (Large/X-Large, 1X/2X) and shown in size Small/Medium on page 37.

●●●○

Finished Measurements

- Bust (closed) 43 (50, 57)"/109 (127, 145)cm
- Length 24¼ (25¼, 26¼)"/61 (63.5, 66)cm

Materials

Noro/KFI *Akari* 7oz/200g balls, each approx 528yd/483m (silk/cotton/viscose/mohair/wool/polyamide)
- 2 (2, 3) balls in #25 Kamakura
- One pair each sizes 6 and 7 (4 and 4.5 mm) needles OR SIZE TO OBTAIN GAUGE
- Four 1-inch (25mm) buttons
- Stitch holders

Gauge

17 sts and 24 rows to 4"/10 cm over St st using larger needles.
TAKE TIME TO CHECK GAUGE

BACK

With smaller needles, cast on 98 (114, 130) sts.
Row 1 (RS) P2, *k2, p2; rep from * to end.
Row 2 (WS) K2, *p2, k2; rep from * to end.
Rep these 2 rows once more.
Change to larger needles.

BEG CHART PAT

Row 1 (RS) Work 8-st rep of chart 12 (14, 16) times, work last 2 sts of chart. Cont to foll chart in this way through row 20, then work rows 1–20 once more, then rows 1–9 once. Piece measures approx 8¾"/22cm from beg.
Last row (WS) Work chart row 10, dec'ing 6 sts evenly spaced across row—92 (108, 124) sts.
Next row (RS) Knit.
Next row (WS) Purl.

Work even for 34 rows more or until piece measures approx 14¾"/37cm from beg.
Place clip-on st marker each side of last row to mark beg of armhole shaping.

ARMHOLE SHAPING

Inc row (RS) K1, M1, k to last st, M1, k1—2 sts inc'd.
Rep inc row every 8th (10th, 12th) row 3 (1, 2) times more, then every 10th row 1 (3, 2) times—102 (118, 134) sts.
Work even until armhole measures 7½ (8½, 9½)"/19 (21.5, 24)cm.

SHOULDER SHAPING

Bind off 5 (6, 7) sts at beg of next 10 rows, 4 (7, 9) sts at beg of next 2 rows. Bind off rem 44 (44, 46) sts for back neck.

RIGHT FRONT

With smaller needles, cast on 50 (58, 66) sts. Work first 4 rows as on back.
Change to larger needles.

BEG CHART PAT

Row 1 (RS) Work the first 8-st rep of chart for 6 (7, 8) reps, work last 2 sts of chart. Cont to foll chart in this way through row 20, the work rows 1–20 once more, then rows 1-10 once.
Piece measures approx 8¾"/22cm from beg.
Next row (RS) Work 10 sts foll chart, k40 (48, 56).
Next row (RS) P to last 10 sts, end k2, p6, k2 (the 10-st chart pat).
Work even in pat for 34 rows more or until piece measures approx 14¾"/37cm from beg.
Place clip-on st marker at end of next (RS) row to mark beg of the armhole shaping.

ARMHOLE AND V-NECK SHAPING

Armhole (inc) and v-neck (dec) row (RS) Work 10 sts foll chart, SKP (v-neck dec), work to last 2 sts, M1 (armhole inc), k1.
**Cont to rep armhole inc's every 8th (10th, 12th) row 3 (1, 2) times more, every 10th row 1 (3, 2) times, AT SAME TIME, work the (SKP) V-neck dec every 2nd row 10 (8, 8) times more, every 4th row 5 (7, 8) times more.
When armhole measures 7½ (8½, 9½)"/19 (21.5, 24cm, work shoulder shaping as foll:**

SHOULDER SHAPING

Bind off 5 (6, 7) sts at beg of next 5 WS rows, 4 (7, 9) sts at beg of next WS row - 10 sts rem. Cont in chart pat on 10 sts for 30 (30, 32) rows or 5 (5, 5¼)"/12.5 (12.5, 13) cm or to fit the center back neck. Leave sts on a st holder.

LEFT FRONT

Cast on and work as for right front for 4 rows.

BEG CHART PAT

Work as for right front for 50 rows or until piece measures approx 8¾"/22cm from beg.
Next row (RS) K40 (48, 56), work 10 sts foll chart.
Cont to work in this way as for right front for 34 rows or until piece measures approx 14¾"/37cm from beg.
Place clip-on st marker at beg of next (RS) row to mark beg of the armhole shaping.

ARMHOLE AND V-NECK SHAPING

Next (inc) and v-neck (dec) row (RS) K1, M1 (armhole inc), work to the last 12 sts, k2tog (v-neck dec), work 10 sts foll chart. Rep between **'s as on right front.

SHOULDER SHAPING

Bind off 5 (6, 7) sts at beg of next 5 RS rows, 4 (7, 9) sts at beg of next RS row —10 sts rem. Complete band as for right front.

FINISHING

Sew shoulder seams. Sew neck band trims in place, adjusting length at center back neck if necessary, then bind off at center back and sew in place.

ARMHOLE TRIMS

With smaller needles, pick up and k 66 (74, 82) sts evenly around one armhole edge. (Purl 1 row, knit 1 row) twice. Bind off. Sew side and armhole trim seams.
Place markers for 4 buttons on left front at eyelet holes with the first one at 9 rows from hem edge, the last one at 12 rows down from beg of neck shaping and 2 other evenly spaced between. Sew on buttons. ■

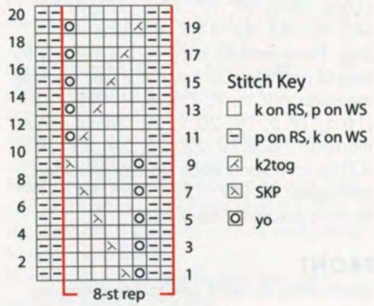

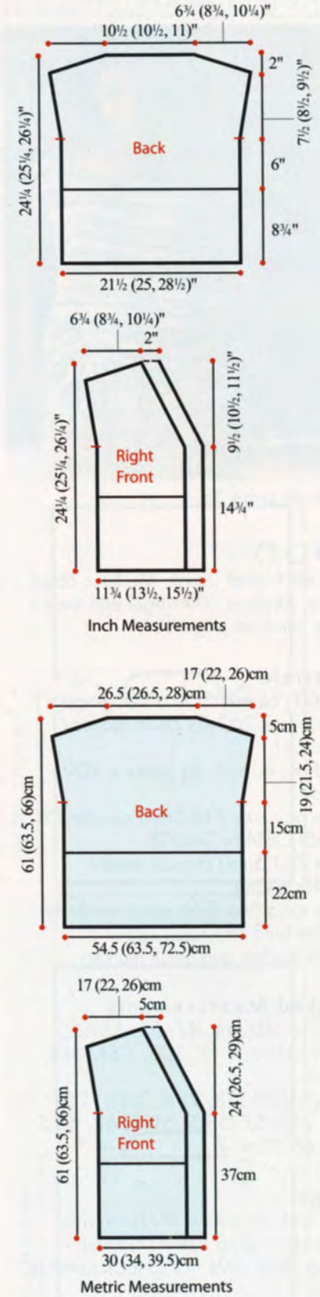

16 Pebble Beach Tee

Shown on page 38.

●●○○

Sized for X-Small (Small, Medium, Large, X-Large, XX-Large, XXX-Large) and shown in size Small on page 38.

Materials

Noro/KFI *Nishiki* 3.5oz/100g hanks, each approx 262yd/240m (cotton/polyamide)
- 3 (3, 4, 4, 5, 5, 6) hanks in #09 Okaya
- One pair size 7 (4.5mm) needles OR SIZE TO OBTAIN GAUGE
- Size 7 (4.5mm) circular needle 16"/40cm long
- One extra Size 7 (4.5mm) needle for 3-needle bind off
- Stitch holders and Stitch markers

Finished Measurements

- Bust 36 (40, 44, 47, 53, 56½, 60)"/91 (101, 112, 120, 134, 144, 152)cm
- Length 22½ (23, 23½, 24½, 25, 26½, 27)"/57 (58.5, 59.5, 62, 63.5, 67.5, 68.5)cm

Gauge

19 sts and 28 rows = 4"/10cm over pattern stitch using size 7 (4.5mm) needles. TAKE TIME TO CHECK GAUGE.

K1, P1 Rib (even number of sts)
Row 1 (RS) *K1, p1; rep from * to end.
Row 2 Rep row 1.
Rep rows 1 and 2 for K1, P1 rib over an even number of sts.

K1, P1 Rib (odd number of sts)
Row 1 (RS) K1, *p1, k1; rep from * to end.
Row 2 P1, *k1, p1; rep from * to end.
Rep rows 1 and 2 for K1, P1 rib over an odd number of sts.

Pattern Stitch (multiple of 3 sts plus 2)
Row 1 (RS) Purl. **Row 2 (WS)** Purl.
Row 3 Knit. **Rows 4 and 5** Purl.
Row 6 Knit. **Row 7** Knit, wrapping yarn twice around RH needles.
Row 8 Purl, while dropping the wrapped stitch to create an elongated stitch.
Row 9 Purl. **Rows 10 and 11** Knit.
Row 12 Purl. **Rows 13 and 14** Knit.
Row 15 Purl. **Rows 16 and 17** Knit.
Rows 18 and 19 Purl. **Row 20** Knit.
Row 21 *K2tog, yo; rep from * end k1.
Rows 22 and 23 Purl. **Rows 24 and 25** Knit. **Rows 26 and 17** Purl. **Row 28** Knit.
Row 29 Rep row 7. **Row 30** Rep row 8.
Row 31 Purl. **Rows 32 and 33** Knit. **Row 34** Purl. **Rows 35 and 36** Knit. **Row 37** *K2, p1; rep from *, end k2. **Row 38** *P2, k1; rep from * end p2. **Rows 39 and 40** Purl. **Row 41** Knit. **Row 42** Purl.
Rep rows 1–42 for Pattern Stitch.

3-Needle Bind-off

1. Hold right sides of pieces together on 2 needles. Insert 3rd needle knitwise into first st of each needle, wrap yarn knitwise.
2. Knit these 2 sts tog and slip them off the needles. *Knit next 2 sts tog in same way.
3. Slip first st on 3rd needle over 2nd st and off needle. Rep from * in step 2 across row until all sts are bound off.

BACK

Cast on 86 (95, 104, 113, 125, 134, 143) sts. Work in k1, p1 rib for 6 rows. Work in St st for 4 rows.

BEGIN PATTERN STITCH

Work rows 1–20.
Row 21 *K2tog, yo; rep from * to last 2 (1, 2, 1, 1, 2, 1) sts, k to end.
Cont in pat st until piece measures 16½ (16½, 16½, 17, 17, 17½, 17½)"/42 (42, 42, 43, 43, 44.5, 44.5)cm from beg. Place markers each end of last row for beg of armhole. Cont in pat st until armhole measures 6 (6½, 7, 7½, 8, 9, 9½)"/15 (16.5, 17.5, 19, 20.5, 23, 24)cm above markers. Place 19 (23, 26, 29, 35, 39, 43) sts on holders each side for shoulders, and center 48 (49, 52, 55, 55, 56, 57) sts on a holder for back neck.

FRONT

Work same as back until piece measures 19½ (20, 20½, 21½, 21½, 23, 23½)"/49.5 (51, 52, 54.5, 54.5, 58.5, 59.5)cm from beg, end with a WS row.

NECK SHAPING

Next row (RS) Work 30 (34, 37, 40, 46, 50, 54) sts, place center 26 (27, 30, 33, 33, 34, 35) sts on holder for front neck, join second ball of yarn and work rem 30 (34, 37, 40, 46, 50, 54) sts. Working both sides at once bind off from each neck edge 4 sts once, 3 sts once, then dec 1 st at each neck edge every RS row 4 times—19 (23, 26, 29, 35, 39, 43) sts rem each side. Work even until piece measures same as for back. Place sts each side on holders for shoulders.

FINISHING

Block pieces to measurements. Join shoulder seams using three-needle bind off.

ARMHOLE BANDS

With RS facing, beg at front armhole marker, pick up and knit 57 (61, 67, 71, 77, 87, 91) sts evenly along front and back armhole, ending at back armhole marker. Work k1, p1 rib for 5 rows. Bind off in rib on RS.

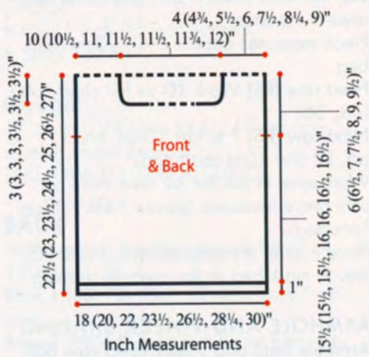

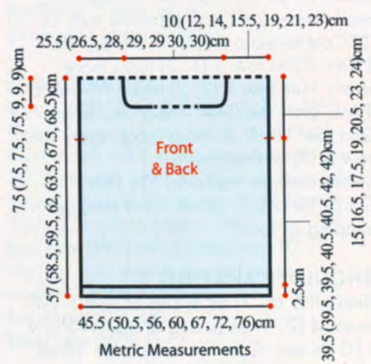

NECKBAND

With RS facing and circular needle, starting at center back neck pick up and knit 104 (108, 114, 116, 118, 120, 122) sts evenly around neck edge. Join and work k1, p1 rib in rnds for 5 rnds. Bind off in rib.
Sew side and armhole band seams. ■

17 Lemon Drop Poncho Top

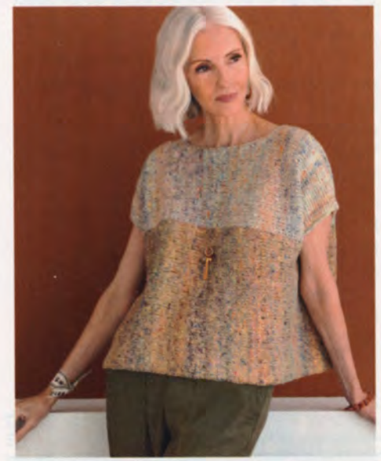

Sized for Small/Medium (Large/X-Large, 2X/3X) and shown in size Small/Medium on page 40.

●●○○

Finished Measurements

- Bust 50 (58, 66, 74)"/127 (148, 168, 188)cm
- Length 19½ (20½, 21¼, 21¾)"/50 (52.5, 54.5, 55.5)cm

Materials

Noro/KFI *Kakigori* 7oz/200g balls, each approx 660yds/600m (cotton/silk/viscose/polyamide)
- 1 (1, 1, 2) balls in #12 Himeji (A)
- 1 ball in #1 Naha (B)
- One pair size 9 (5.5mm) needles OR SIZE TO OBTAIN GAUGE
- One size H/8 (5mm) crochet hook
- Stitch markers and stitch holder

Gauge

17 sts and 23 rows to 4"/10cm over St st using size 9 (5.50mm) needles.
TAKE TIME TO CHECK GAUGE.

Notes

1) Top is worked in one piece, from left side edge to right side edge.
2) If only one ball of A is stated in requirements, divide ball into 2 equal portions to work both lower front and back at same time.
3) When changing colors, twist yarns on WS to prevent holes in work.

LEFT SIDE EDGE/SHOULDER SHAPING

With 5.5mm (US 9) needles and A, cast on 51 sts; with B, cast on 54 (62, 68, 72) sts; with A, cast on 51 sts—156 (164, 170, 174) sts.
Row 1 (RS) With A, sl 1 wyif, k50; with B, k26 (30, 33, 35), place marker (pm), k2, pm, k26 (30, 33, 35); with A, k51.
Row 2 With A, sl 1 wyif, k1, p49 ; with B, p26 (30, 33, 35), slip marker (sm), k2, sm, p26 (30, 33, 35); with A, p49, k2.
Cont in pats as established, keeping first and last 2 sts in garter st, for 4 (4, 4, 8) rows more, end with a WS row.
Next (inc) row (RS) Cont in pat to marker, M1L, sm, k2, sm, M1R, patt to end—158 (166, 172, 176) sts.
Work 5 (7, 7, 9) rows even in pat.
Rep last 6 (8, 8, 10) rows 4 times more, then work inc row once—168 (176, 182, 186) sts. Work 5 (5, 5, 11) rows even, end with a WS row—piece should measure approx 7½ (9, 10¾, 12½)"/19 (23, 27.5, 32)cm from beg).

SEPARATE FOR NECK OPENING

Next row (RS) Work 84 (88, 91, 93) sts and place these sts on holder for back neck, bind off next 4 sts, work to end—80 (84, 87, 89) sts. Remove shoulder markers.
Working over front sts only, work as foll:
Row 1 (WS) Work even in pat.
Row 2 (dec–RS) K1, k2tog, work to end—79 (83, 86, 88) sts.
Rep dec row every other row 3 times more, then every 4th row once—75 (79, 82, 84) sts.
Work even until front neck opening measures 7½ (8½, 9, 9½)"/19 (20, 23, 24)cm, end with a WS row.
Next (inc row–RS) K1, M1R, patt to end—76 (80, 83, 85) sts.
Rep inc row every 4th row once, then every other row 3 times, end with a RS row—80 (84, 87, 89) sts.
Next row (WS) Work i pat to end of row, turn and cast on 4 sts—84 (88, 91, 93) sts. Cut yarn B (leaving yarn A) and place front sts on st holder.
Place back sts on needle and join yarn ready to work a WS row.
Work in pat until opening measures 10 (11, 11½, 12½)"/25.5 (28, 29, 32)cm, end with a WS row.
Joining row (RS) Work back sts, work from sts from holder—168 (176, 182, 186) sts.

RIGHT SIDE/SHOULDER SHAPING

Row 1 (RS) With A, sl 1 wyif, k50; with B, k26 (30, 33, 35), place marker (pm), k2, pm, k26 (30, 33, 35); with A, k51.
Row 2 With A, sl 1 wyif, k1, p49; with B, p26 (30, 33, 35), slip marker (sm), k2, sm, p26 (30, 33, 35); with A, p49, k2.
Cont in pat as established, keeping first and last 2 sts in garter st, for 4 (4, 4, 8) rows more, end with a WS row.
Next row (dec–RS) Cont in pat to marker, ssk, sm, k2, sm, k2tog, pat to end—158 (166, 172, 176) sts.

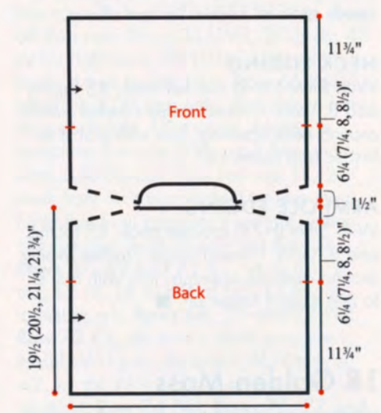

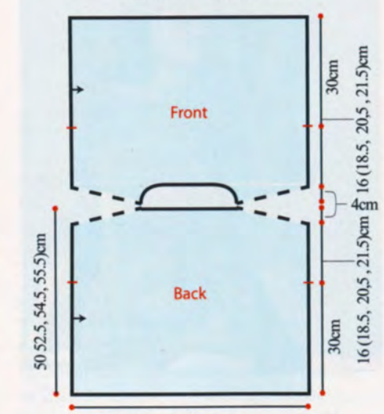

Work 5 (7, 7, 9) rows even. Rep last 6 (8, 8, 10) rows 4 times more, then work inc row once—168 (176, 182, 186) sts. Work 5 (5, 5, 11) rows even, end with a WS row—piece should measure 7½ (9, 10¾, 12½)"/19 (23, 27.5, 32)cm from joining row. Bind off all sts in pat.

FINISHING
Block to measurements. Fold piece in half, Along each side edge of front, place a marker at 9½ (9½, 10, 10, 10)"/24 (24, 25.5, 25.5, 25.5)cm up from cast-on edge. Sew bound-off edge of sleeve to side edge of back to shoulder join. Place back flat on a surface with WS facing. Using assembly diagram as a guide, fold sleeves along the dotted lines to form a triangle. Lightly tack beginning and end of cast-on row of Sleeve together and match this join to marker on side edge of Front. Starting at shoulder, sew side edges of sleeve to front. Repeat for rem sleeve.

NECK EDGING
With 5mm (H/8) crochet hook, RS facing and B, work 1 round single crochet evenly around neck opening. Join with a sl st to first sc and fasten off.

ARMHOLE EDGING
With 5mm (H/8) crochet hook, RS facing and B, work 1 round single crochet evenly around armhole opening. Join with a sl st to first sc and fasten off. ■

18 Golden Moss

Sized for Small (Medium, Large, 1X, 2X, 3X 4X). Shown in size Small on page 42.

●●●○

Finished Measurements
- Bust 38 (42, 46, 50, 54, 58, 62)"/96 (107, 117, 127, 137, 147, 158)cm
- Length 26 (26, 26½, 26½, 27, 27, 27¾)"/66 (66, 67.5, 67.5, 68.5, 68.5, 70)cm

Materials
Noro/KFI *Sonata* 3.5oz/100g skeins each approx 393yd/359m (cotton/viscose/silk/polyamide)
- 3 (4, 4, 4, 5, 5, 5) hanks in #18 Moss
- One size 7 (4.5mm) circular needle, 24"/60cm long OR SIZE TO OBTAIN GAUGE
- One size D/3 (3.25mm) crochet hook

Gauges
- 20 sts and 20 rows to 4"/10cm over St st using size 7 (4.5mm) needles.
- 20 sts and 26 rows to 4"/10cm over open stitch pat using size 7 (4.5mm) needles.

TAKE TIME TO CHECK GAUGES.

Open Stitch Pattern
(multiple of 2 sts plus 3)
Row 1 (WS) Sl 1, k to end. **Row 2 (RS)** Sl 1, k to end. **Row 3** Sl 1, k1, p1, *yo, p2tog; rep from * to last 2 sts, p1, k1. **Row 4** Sl 1, k to end.
Rep rows 1–4 for open stitch pattern.

Notes
1) Top is worked in one piece, from lower front edge to shoulder, then from shoulder to lower back edge.
2) Slip the first st and knit the last st of every row.
3) To make tunic longer, work one additional St st/garter block on front and back.
4) Circular needle is used to accommodate large number of sts, do *not* join.

TUNIC
Cast on 95 (105, 115, 125, 135, 145, 155) sts. **Next row (WS)** Sl 1, p to last st, k1. ***Next 12 rows** Sl 1, k to end. Work in St st (k on RS, p on WS) for 2½"/6.5cm, end with a WS row.* Rep from * to * 3 times more.

ADD SLEEVES
Next row (RS) Cast on 45 sts, k to end—140 (150, 160, 170, 180, 190, 200) sts. **Next row (WS)** Cast on 45 sts, k to end—185 (195, 205, 215, 225, 235, 245) sts. **Next 10 rows** Sl 1, k to end. Work in St st for 2½"/6.5cm.

BEG OPEN STITCH PAT
Work in open stitch pat until sleeve measures approx 9 (9, 9½, 9½, 10, 10, 10¾)"/23 (23, 24, 24, 25.5, 25.5, 27)cm from sleeve cast on edge, end with a row 3. Make note of length of open stitch pat to shoulder.

NECK OPENING
Next row (RS) Sl 1, work 60 (65, 70, 75, 80, 85, 90) sts in pat, bind off center 63 sts, work in pat to end. **Next row (WS)** Sl 1, work 60 (65, 70, 75, 80, 85, 90) sts in pat, cast on 63 sts, work in pat to end—185 (195, 205, 215, 225, 235, 245) sts. Cont in open stitch pat until piece measures same length from shoulder as front length of pat to shoulder, end with a row 1.
Work in St st for 2½"/6.5cm, end with a WS row. **Next 10 rows** Sl 1, k to end.

BIND OFF SLEEVES
Next row (RS) Bind off 45 sts, k to end—140 (150, 160, 170, 180, 190, 200) sts. **Next row (WS)** Bind off 45 sts, k to end—95 (105, 115, 125, 135, 145, 155) sts.

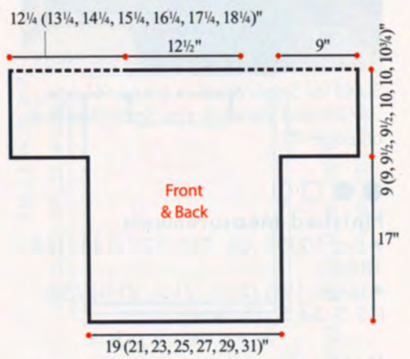

Inch Measurements

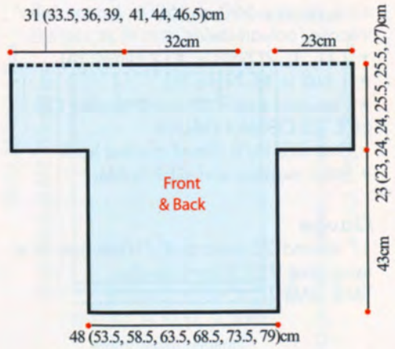

Metric Measurements

Work in St st for 2½"/6.5cm, end with a WS row. **Next 12 rows Sl 1, k to end.** Rep from ** to ** 3 times more. Bind off.

FINISHING
Block lightly to measurements. Sew side and underarm seams.

NECK TRIM
With RS facing and crochet hook, work 1 rnd of sc evenly around neck opening, using a firm tension. Work 1 rnd of backwards sc (work from left to right). Fasten off. ■

19 Ocean Sunset Cardi

Sized for Small/Medium (Large/X-Large, 1X/2X). Shown in size Small/Medium on page 44.

●●●●

Finished Measurements
- Bust 46½ (51, 55½)"/118 (129.5, 141)cm
- Length (excluding trim) 33½ (34, 34)"/85 (86.5, 86.5)cm

Materials
Noro/KFI *Tsubame* 7oz/200g balls, each approx 656yd/600m (silk/wool/polyamide)
- 3 (4, 4) skeins in #9 Yatsushiro
- 3 size 7 (4.5mm) circular needles, 24"/60cm or longer OR SIZE TO OBTAIN GAUGE
- One size 5 (3.75mm) circular needle, 40"/100cm long
- One set (4) size 5 (3.75mm) double-pointed needles (dpn)
- Cable needle (cn)
- Stitch markers and stitch holders

Gauge
18 sts and 25 rows to 4"/10cm over rib pat using size 7 (4.5mm) needles.
TAKE TIME TO CHECK YOUR GAUGE.

Short Row Wrap & Turn (w&t)
See Pattern #6.

3-needle Bind-off
(See Pattern #16)

Stitched Used
M1R (M1R p-st) Insert LH needle from back to front under strand between last st worked and next st on needle. Knit (purl) into the front loop—1 k (p) st inc'd.
M1L (M1L p-st) Insert LH needle from front to back under strand between last st worked and next st on needle. Knit (purl) into the back loop 1 k (p) st inc'd..
1/1 RC Sl 1 st to cn, hold to *back*, k1, k1 from cn.
1/1 LC Sl 1 to cn, hold to *front*, k1, k1 from cn.

Rib Pattern (multiple of 2 sts plus 1)
Row 1 (RS) K1 tbl, *p1, k1 tbl; rep from * to end. **Row 2 (WS)** Purl.
Rep rows 1 and 2 for rib pat.

Note
Body is worked in one piece to underarms, then back and fronts are worked separately to shoulder.

BACK
With larger circular needle, cast on 89 (99, 109) sts. Purl 1 row.

BEG RIB PAT AND FRONT CURVE
Note 1 st is inc'd at each side for front inc's *every* RS row.
Row 1 (RS) K1, M1R, k1tbl, *p1, k1tbl; rep from * to last st, M1L, p1—2 sts inc'd. **Row 2** Purl. **Row 3** K1, k1tbl, M1R p-st, work rib to last 2 sts, M1L p-st, k1tbl, p1—2 sts inc'd. **Row 4** Purl. **Rows 5–8** Rep rows 1–4. **Row 9** Rep row 1—99 (109, 119) sts. **Row 10 (WS)** P9, place marker 2 (m2), p to last 8 sts, place marker 1 (m1), p8.
Note In addition to front inc's each side, sts are inc'd on either side of markers (m1 and m2) at "side seams".
Row 11 (RS) K1, k1tbl, M1R p-st, rib to m1, M1R, sl m1, k1tbl, M1L, rib to m2, M1R, sl m2, k1tbl, M1L, rib to last 2 sts, M1L p-st, k1tbl, p1—6 sts inc'd. **Rows 12, 14, 16 and 18** Purl. **Row 13** K1, M1R, rib to m1, sl m1, k2tbl, rib to m2, sl m2, k2tbl, rib to last st, M1L, p1—2 sts inc'd. **Row 15** K1, k1tbl, M1R p-st, rib to m1, sl m1, k2 tbl, rib to m2, sl m2, k2 tbl, rib to last 2 sts, M1L p-st, k1tbl, p1—2 sts inc'd. **Row 17** Rep row 13. **Row 19** Rep row 15. **Row 20** Purl—113 (123, 133) sts. **Row 21 (RS)** K1, M1R, rib to m1, M1R p-st, sl m1, k1 tbl, M1L p-st, rib to m2, M1R p-st, sl m2, k1 tbl, M1L p-st, rib to last st, M1L, k1—6 sts inc'd. **Row 22** Purl. **Rows 23–30** Rep rows 3–10 (omit placing markers when repeating row 10). **Rows 31–40** Rep rows 11–20. **Rows 41–48** Rep rows 21 and 22, then rep rows 3–8—153 (163, 173) sts. **Row 49 (RS)** K1, M1R, rib to m1, M1R, sl m1, k1 tbl, M1L, rib to m2, M1R, sl m2, k1 tbl, M1L, rib to last st, M1L, k1—6 sts inc'd. **Row 50** Purl. **Rows 51–56** Rep rows 15–20—165 (175, 185) sts. **Row 57** Rep row 21. **Row 58** Purl. **Rows 59–64** Rep rows 3–8—177 (187, 197) sts. **Row 65** Rep row 49—183 (193, 203) sts; 43 sts for right front, 96 (106, 116) sts for back, 44 sts for left front. **Row 66** Purl.
Note For S/M size only, discontinue front inc's each side, front curve shaping is complete. For size L/XL, work front inc's each side 8 times more For size 1X/2X, work front inc's each side 16 times more. Note that front edge inc's are not written into foll row, work or omit per the size.
Rows 67, 69 and 71 K1, rib to m1, sl m1, k2 tbl, rib to m2, sl m2, k2 tbl, rib to last st, p1. **Rows 68, 70 and 72** Purl. **Row 73** K1, rib to m1, M1R p-st, sl m1, k1 tbl, M1L p-st, rib to m2, M1R p-st, sl m2, k1 tbl, M1L p-st, rib to last st, k1—4 sts inc'd. **Row 74** Purl. **Rows 75, 77 and 79** K1, rib to last st, k1. **Rows 76, 78 and 80** Purl. **Row 81** K1, rib to m1, M1R, sl m1, k1 tbl, M1L, work to rib to m2, M1R, sl m2, k1 tbl, M1L, rib to last st, k1—4 sts inc'd. **Row 82** Purl. **Rows 83, 85 and 87** Rep row 67. **Rows 84, 86 and 88** Purl. **Row 89** Rep row 73—4 sts inc'd. **Row 90** Purl. **Rows 91, 93 and 95** Rep row 75. **Rows 92, 94 and 96** Purl. **Row 97** Rep row 81—4 sts inc'd. **Row 98** Purl. **Rows 99 and 101** Rep row 67. **Rows 100 and 102** Purl—199 (225, 251) sts; 47 (55, 63) sts for right front, 104 (114, 124) sts for back, 48 (56, 64) sts for left front.

SEPARATE FRONTS AND BACK
Next row (RS) With a second size 7 (4.5mm) circular needle, work in pat to 2 sts before m1, 1/1 RC, remove marker—47 (55, 63) sts for right front. Cont across row with third size 7 (4.5mm) circular needle, k1, 1/1 LC, rib to 2

sts before m2, 1/1 RC, remove marker, k1—105 (115, 125) sts for back. Turn to cont working back sts, leave rem 47 (55, 63) sts on original needle for left front.

UPPER BACK AND SLEEVES

Note Columns of cables run up the back, shifting towards the center every 4 rows. The rib pat is worked between the cables, while sts outside cables are worked in St st (k on RS, p on WS). At the same time, the sleeves are shaped by inc'ing every row.
Next row (WS) P105 (115, 125).
Row 1 (RS) K1, M1R, 1/1 LC, place marker 1 (m1), rib to last 3 sts, place marker 2 (m2), 1/1 RC, M1L, k1—2 sts inc'd. **Row 2 and all WS rows** P1, M1R p-st, p to last st, M1L p-st, p1—2 sts inc'd. **Row 3** K1, M1L, k2, 1/1 LC, sl m1, rib to last 5 sts, sl m2, 1/1 RC, k2, M1R, k1—2 sts inc'd. **Row 5** K1, M1R, k to 1 st before m1, yo, ssk removing m1 and replacing after ssk, rib to 1 st before m2, place new m2, k2tog removing original m2, yo, k to last st, M1L, k1—2 sts inc'd. **Row 7** K1, M1L, k to 1 st before m1, 1/1 LC removing m1 and replacing after cable, rib to 1 st before m2, place new m2, 1/1 RC removing original m2, k to last st, M1R, k1—2 sts inc'd. **Row 8** Rep row 2. Rep rows 5–8 for 5 (7, 7) times—161 (187, 197) sts.
Note Discontinue cable pat. Eyelets and marker shifts are still worked every 4 rows.
Row 29 (37, 37) (RS) Rep row 5—2 sts inc'd. **Row 30 (38, 38)** Rep row 2.
Row 31 (39, 39) K1, M1R, k to m1, sl m1, rib m2, sl m2, k to last st, M1L, k1—2 sts inc'd. **Row 32 (40, 40)** Rep row 2. Rep last 4 rows 4 (2, 2) times—201 (211, 221) sts.
Note Discontinue sleeve inc's. Eyelets and marker shifts are still worked every 4 rows.
Row 49 K to 1 st before m1, yo, ssk removing m1 and replacing after ssk, rib to 1 st before m2, place new m2, k2tog removing original m2, yo, k to end.
Row 50 Purl. **Row 51** K to m1, sl m1, rib m2, sl m2, k to end. **Row 52** Purl.
Rep last 4 rows 6 (7, 7) times more.

SHOULDER SHAPING

Note Cont to work eyelets and marker shift every 4 rows as before until there are 35 (39, 47) sts between markers. **Short rows 1 and 2** Work pat to last 6 sts, w&t. **Note:** Short Rows will now be stated as "SR".
SR 3 and 4 Workin pat to 6 sts before last wrapped st, w&t. **SR 5–14** Rep SR 3 and 4 five times. **SR 15 and 16** Work pat to 5 (6, 6) sts before last wrapped st, w&t. **SR 17–24** Rep SR 15 and 16 four times. **SR 25 and 26** Work pat to 5 sts before last wrapped st, w&t. **SR 27 and 28** Rep rows 25 and 26 once more. **SR 29 and 30** Work in pat to 5 (4, 5) sts before last wrapped st, w&t. **Next row (RS)** Work 35 (39, 47) sts in rib pat, k to end closing wraps. **Next row (WS)** Purl, closing rem wraps. **Next row** K83 (86, 87), bind off center 35 (39, 47) sts, k to end. Leave sts each side on hold on needle.

RIGHT FRONT

Return to 47 (55, 63) sts on hold for right front. Join yarn ready to work a WS row.
Next row (WS) P47 (55, 63). **Row 1 (RS)** Work rib to last 3 sts, pm, 1/1 RC, M1L, k1—1 st inc'd. **Row 2 and all WS rows** P1, M1R p-st, p to end—1 st inc'd. **Row 3** Work rib to 1 st before marker, place new marker, 1/1 RC removing original marker, k to last st, M1R, k1—1 st inc'd. **Row 5** Work rib to 1 st before marker, place new marker, k2tog removing original marker, yo, k to last st, M1L, k1—1 st inc'd.
Row 6 Rep row 2.

FOR SMALL/MEDIUM ONLY

Rows 7–26 Rep rows 3–6 for 5 times.
Row 27 Rep row 3 (final cable row.)
Row 28 Rep row 2. **Row 29** Rep row 5—1 st inc'd. **Row 30** Rep row 2.
Row 31 Work in rib to last st, M1R, k1—1 st inc'd. **Row 32** Rep row 2.

BEG V-NECK SHAPING

Row 33 K1, p1, ssk (neck dec), rib to 1 st before marker, place new marker, k2tog removing original marker, yo, k to last st, M1L, k1. **Row 34 and all WS rows** P1, M1R p-st, p to end—1 st inc'd. **Row 35** Work in rib to last st, M1L, k1—1 st inc'd. **Row 36** Rep row 34—1 st inc'd. Rep last 4 rows 3 times more, AT SAME TIME, rep neck dec every 6th row 11 times more (neck dec sequence will cont into next section).

FOR L/X-L AND 1X/2X ONLY

Rows 7–30 Rep rows 3–6 for 6 times.
Row 31 Rep row 3. **Row 32** Rep row 2.

BEG V-NECK SHAPING

Row 33 K1, p1, ssk (neck dec), rib to 1 st before marker, place new marker, k2tog removing original marker, yo, k to last st, M1L, k1. **Row 34 and all WS rows** P1, M1R p-st, p to end—1 st inc'd. Rep neck dec every other row 0 (9) times, then every 4th row 16 (14) times more, AT SAME TIME, work as foll:
Row 35 Rep row 3 (final cable row.)
Row 37 Work in rib to last st, M1L, k1.
Row 39 Rep row 33. **Row 41** Rep row 37. **Row 42** P1, M1R p-st, p to end—1 st inc'd. **Rows 43–48** Rep last 4 rows once, then rep rows 39 and 40 once more.

FOR BOTH SIZES

Discontinue sleeve shaping (side edge inc) and cont in rib, working eyelet/marker shift every 4 rows and neck shaping as established, for 28 (32, 32) rows more.

SHOULDER SHAPING

Note Cont to work eyelets and marker shift every 4 rows and neck shaping as before.
SR 1 and 2 Work in pat to last 6 sts, w&t, purl to end. **SR 3 and 4** Work in pat to 6 sts before last wrapped st, w&t, purl to end. **SR 5–14** Rep SR 3 and 4 five times. **SR 15 and 16** Work in pat to 5 (6, 6) sts before last wrapped st, w&t, purl to end. **SR 17–24** Rep SR 15 and 16 four times. **SR 25 and 26** Work in pat to 5 sts before last wrapped st, w&t, purl to end. **SR 27 and 28** Rep rows 25 and 26 once more. **SR 29 and 30** Work in pat to 5 (4, 5) sts before last wrapped st, w&t, purl to end. **Next row (RS)** K to end closing wraps—83 (86, 87) sts. Knit 9 (15, 15) rows. Leave sts each side on needle.

LEFT FRONT

Return to 47 (55, 63) sts on hold for left front. Join yarn ready to work a RS row.
Row 1 (RS) K1, M1R, 1/1 LC, pm, rib to end—1 st inc'd. **Row 2 and all WS rows** P to last st, M1L p-st, p1—1 st inc'd.
Row 3 K1, M1R, k to 1 st before marker, 1/1 LC removing marker and replacing after cable, rib to end—1 st inc'd.
Row 5 K1, M1R, k to 1 st before marker, yo, ssk removing marker and replacing after ssk, rib to end—1 st inc'd.

FOR SMALL/MEDIUM ONLY

Rows 7–26 Rep rows 3–6 for 5 times.
Row 27 Rep row 3 (final cable row.)
Row 28 Rep row 2. **Row 29** Rep row 5—1 st inc'd. **Row 30** Rep row 2.
Row 31 K1, M1R, rib to end—1 st inc'd.
Row 32 Rep row 2.

BEG V-NECK SHAPING

Row 33 K1, M1R, k to 1 st before marker, yo, ssk removing marker and replacing after ssk, rib to last 4 sts, k2tog (neck dec), p1, k1. **Row 34 and all WS rows** P to last st, M1L p-st, p1—1 st inc'd. **Row 35** K1, M1R, rib to end—1 st inc'd. **Row 36** Rep row 34—1 st inc'd.
Rep last 4 rows 3 times more, AT SAME TIME, rep neck dec every 6th row 11 times more (neck dec will cont).

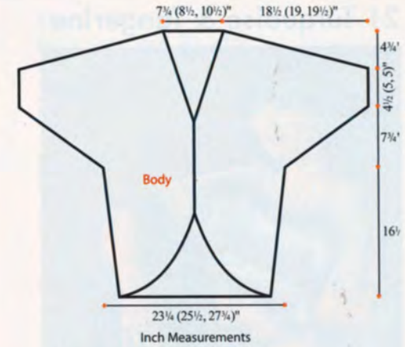

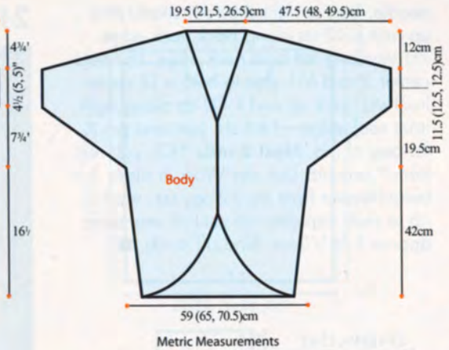

FOR L/X-L AND 1X/2X ONLY

Rows 7–30 Rep rows 3–6 for 6 times.
Row 31 Rep row 3. **Row 32** Rep row 2.

BEG V-NECK SHAPING

Row 33 K1, M1R, k to 1 st before marker, yo, ssk removing marker and replacing after ssk, rib to last 4 sts, k2tog (neck dec), p1, k1. **Row 34** and all WS rows P to last st, M1L p-st, p1—1 st inc'd.
Rep neck dec every other row 0 (9) times, then every 4th row 16 (14) times more, AT SAME TIME, work as foll: **Row 35** Rep row 3 (final cable row.) **Row 37** K1, M1R, rib to end. **Row 39** Rep row 33. **Row 41** Rep row 37. **Row 42** P1, M1R p-st, p to end—1 st inc'd. **Rows 43–48** Rep last 4 rows once, then rep rows 39 and 40 once more.

FOR BOTH SIZES

Discontinue sleeve shaping (side edge inc) and cont in rib, working eyelet/marker shift every 4 rows and neck shaping as established, for 28 (32, 32) rows more.

SHOULDER SHAPING

Note Cont to work eyelets and marker shift every 4 rows and neck shaping as before.
Next row (RS) Work in pat to end.
SR 1 and 2 Purl to last 6 sts, w&t, rib to end. **SR 3 and 4** Purl to 6 sts before last wrapped st, w&t, rib to end. **SR 5–14** Rep SR 3 and 4 five times. **SR 15 and 16** Purl to 5 (6, 6) sts before last wrapped st, w&t, rib to end. **SR 17–24** Rep SR 15 and 16 four times. **SR 25 and 26** Purl to 5 sts before last wrapped st, w&t, rib to end. **SR 27 and 28** Rep rows 25 and 26 once more. **SR 29 and 30** Purl to 5 (4, 5) sts before last wrapped st, w&t, rib to end.
Next row (WS) P to end closing wraps—83 (86, 87) sts. Knit 9 (15, 15) rows. Leave sts each side on hold.

FINISHING

Join shoulders using 3-needle bind-off method. Sew underarm seams.

BODY TRIM

With RS facing and smaller, longer circular needle, beg at center of lower back edge, pick up and k sts evenly around edges of entire body, picking up 3 sts for every 4 rows along front edges. Pm for beg of rnd. Purl 1 rnd, [knit 1 rnd, purl 1 rnd] 6 (8) times. Bind off.

SLEEVE TRIM

With RS facing and dpn, pick up and k 50 (58, 58) sts around sleeve edge. Pm for beg of rnd. Work in garter st as for body trim (knit 1 rnd, purl 1 rnd) for 1½ (2, 2)"/4 (5, 5)cm. Bind off. ■

20 Peach Blossom

Sized for Small–Large (1X–2X, 3X–4X. Shown in size Small–Large on page 46.

●●●○

Finished Measurements

- Bust 68 (72, 76)"/172.5 (182.5, 193)cm
- Length 26 (26 ½, 27)"/66 (67.5, 68.5)cm

Materials

Noro/KFI Akari 7oz/200g balls, each approx. 528yd/483m (silk/cotton/viscose/mohair/wool/polyamide)
- 3 (4, 4) skeins in #6 Uruma
- One each sizes 7 and 8 (4.5 and 5mm) circular needles, 24"/60cm long OR SIZE TO OBTAIN GAUGE
- One each sizes 6 and 7 (4 and 4.5mm) circular needles, 16"/40cm long
- Stitch markers
- Stitch holders or spare circular needles

Gauge

16 sts and 28 rows = 4"/10cm over lace pat using size 8 (5mm) needles.
TAKE TIME TO CHECK GAUGE.

Lace Pattern (multiple of 2 sts plus 1)

Row 1 (RS) K1, *yo, k2tog; rep from * to end. **Row 2** Purl. **Row 3** *Ssk, yo; rep from * to last st, k1. **Row 4** Purl.
Rep rows 1–4 for lace pat.

3-needle Bind-off

See Pattern #16

Note Circular needles are used to accommodate large number of sts for body, do *not* join unless otherwise stated.

BACK

With size 8 (5mm) needle, cast on 190 (198, 206) sts.
Row 1 (WS) P2, *k2, p2; rep from * to end. **Row 2** K2, *p2, k2; rep from * to end. Rep last 2 rows for k2, p2 rib for 2½"/6.5cm, end with a RS row.
For S–L only—Dec row (WS) [K2, k2tog, k2, k2tog, k1, k2tog] 17 times, k3—139 sts.
For 1X–2X only—Dec row (WS) *[K2, k2tog] 4 times, k1, k2tog; rep from * 9 times more, k3, k2tog, k3—147 sts.
For 3X–4X only—Dec row (WS) [K2, k2tog] 51 times, k2—155 sts.
For all sizes, beg lace pat—Row 1 (RS) K2 (St st edge sts), work lace pat to last 2 sts, k2 (St st edge sts).
Row 2 P2, work lace pat to last 2 sts, p2. Cont lace pat in this way, working 2 edge sts each side in St st, until piece measures 25¼ (25¾, 26¼)"/64 (65.5, 66.5)cm from beg, end with a WS row.

NECK SHAPING

Next row (RS) Work 64 (68, 72) sts, join 2nd ball of yarn and bind off center 11 sts, work to end. Working both sides at once with separate balls of yarn, bind off 5 sts at each neck edge twice.
Work 1 WS row—54 (58, 62) sts rem each side. Leave shoulder sts each side on hold on st holders or spare circulars.

FRONT

Work as for back until piece measures 15 (15½, 16)"/38 (39.5, 40.5)cm from beg, end with a WS row.

SHAPE V-NECK

Next row (RS) Work 69 (73, 77) sts in pat, place center st on small st marker or safety pin, join 2nd ball of yarn and work in pat to end. Working both sides at once with separate balls of yarn, work 3 rows even in pat. **Dec row (RS)** Work to last 2 sts of first side, k2tog; ssk, work to end of second side—1 st dec'd each side. Work 5 rows even, rep dec row, work 3 rows even. Rep last 10 rows 6 times more, then rep dec row once more—54 (58, 62) sts rem each side. Work even until front measures same as back to shoulder, end with a WS row. Join shoulders using 3-needle bind-off. Place markers each side of front and back 6 (6½, 7)"/15 (16.5, 18)cm from shoulder. Sew side seams from markers to lower edge.

SLEEVES

With RS facing and shorter size 7 (4.5mm) needle, beg at underarm, pick up and k 38 (40, 44) sts along armhole edge to shoulder seam, 38 (40, 44) sts along armhole edge to underarm, pick up 1 st in seam—77 (81, 89) sts. Join and place marker (pm) for beg of rnd.
Next rnd *K2, p2; rep from * to last 5 sts, k5. Rep last rnd 5 times more. **Dec rnd** K1, ssk, work in rib as established to last 4 sts, k2tog, k2—2 sts dec'd. Cont in rib, rep dec rnd every 4th rnd 5 (5, 7) times, then every 2nd rnd 5 (6, 6) times—55 (57, 61) sts. Work even, if necessary, until sleeve measures 5 (5½, 6½)"/13 (14, 16.5)cm, dec 1 st on last row—54 (56, 60) sts. Change to size 6 (4mm) needle. **Next rnd** *K1, p1; rep from * around. Rep last rnd for k1, p1 rib for 3"/7.5cm. Bind off.

FINISHING

Block lightly to measurements.

NECKBAND

With RS facing and longer size 7 (4.5mm) needle, beg at right shoulder seam, pick up and k 42 sts along back neck edge, 70 sts along left front neck edge, knit held center st and M1 next to held st (2 center front sts), pick up and k 70 sts along right front neck edge—184 sts. Join and pm for beg of rnd. **Next 2 rnds** *K2, p2; rep from * around. Dec rnd Work in rib to 1 st before center front sts, k2tog, ssk, work in rib to end. Rep dec rnd until rib measures approx 1 ¼"/3cm. Bind off in rib. ■

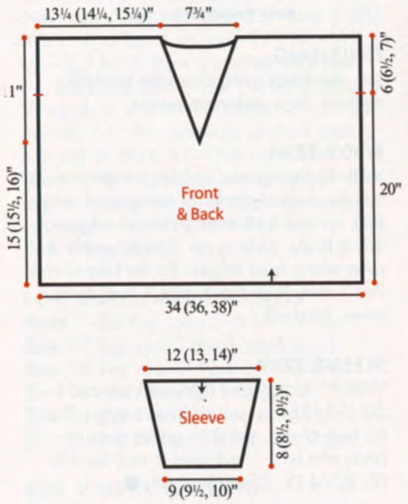

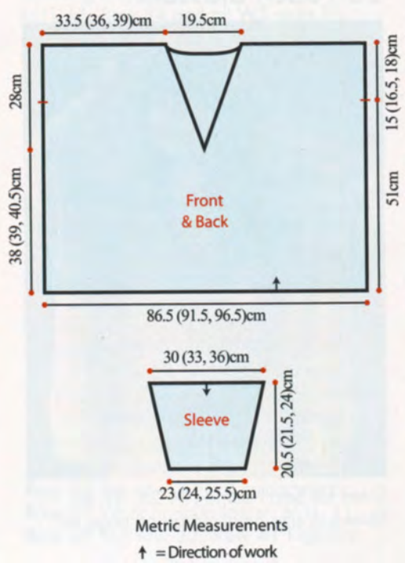

21 Turquoise & Tangerine

Sized for X-Small (Small–Medium, Large–1X, 2X, 3X) and show in size Small/Medium on page 48.

●●○○

Finished Measurements

- Bust 44 (48, 52, 56, 60)"/ 111.5 (122, 132, 142, 152.5)cm
- Length 23 (23, 23 ½, 24, 24 ½)"/58.5 (58.5, 60, 61, 62.5)cm
- Upper arm 10 (10, 11, 12, 13)"/25 (25, 28, 30, 33)cm

Materials

Noro/KFI *Taiyo* 3.5oz/100g skeins, each approx 219yd/200m (cotton/silk/wool/polyamide)
- 4 (4, 5, 5, 6) skeins of #104 Ogaki
- One pair each sizes 10 and 10 1/2 (6 and 6.5mm) needles OR SIZE TO OBTAIN GAUGE
- Size 10 (6mm) circular needle 16"/40cm long
- Stitch holders and stitch markers

Gauge

15 sts and 20 rows = 4"/10cm over pat st using size 10½ (6.5mm) needles.
TAKE TIME TO CHECK GAUGE.

K1, P1 Rib

(over an odd number of sts)
Row 1 (RS) K1, *p1, k1; rep from * to end.
Row 2 P1, *k1, p1; rep from * to end.
Rep rows 1 and 2 for k1, p1 rib.

Pattern Stitch

Row 1 (RS) K1, *p1, k1; rep from * to end.
Row 2 (WS) Purl.
Rep rows 1 and 2 for Pat St.

3-Needle Bind-off

(see Pattern #16)

BACK

With smaller needles, cast on 83 (91, 97, 105, 113) sts. Work in k1, p1 rib for 4 rows. Change to larger needles. Work in Pat St until piece measures 18"/46cm from beg. Place markers each end of last row for beg of armhole.
Cont in pat st until armhole measures 5 (5, 5½, 6, 6½)"/12.5 (12.5, 14, 15, 16.5cm above markers.
Place 25 (29, 32, 36, 40) sts on holders each side for shoulders, and center 33 sts on a holder for back neck.

FRONT

Work same as back until armhole measures 3 (3, 3½, 4, 4½)"/7.5 (7.5, 9, 10, 11.5)cm from beg, end with a WS row.

NECK SHAPING

Next row (RS) Work 32 (36, 39, 43, 47) sts, place center 19 sts on holder for front neck, join second ball of yarn and work rem 32 (36, 39, 43, 47) sts.
Working both sides at once, bind off from each neck edge 3 sts once, 2 sts once, then dec 1 st at each neck edge every RS row 2 times—25 (29, 32, 36, 40) sts rem each side.
Work even until piece measures same as back to shoulder. Place sts each side on holders for shoulders.

FINISHING

Block pieces to measurements. Join shoulder seams using three-needle bind off.

SLEEVES

With RS facing and smaller needle, beg at front armhole marker, pick up and knit 43 (43, 47, 51, 55) sts evenly along front and back armhole, ending at back armhole marker. Work k1, p1 rib for 8"/20.5cm, end with a WS row. Bind off in rib on RS. Sew side and sleeve seams.

NECKBAND

With RS facing and circular needle, starting at center back neck, pick up and knit 76 sts evenly around neck edge, including sts on center front neck holder. Join and place marker for beg of rnd.
Next rnd *K1, p1; rep from * around.
Cont in k1, p1 for 4 rnds more.
Bind off in rib. ■

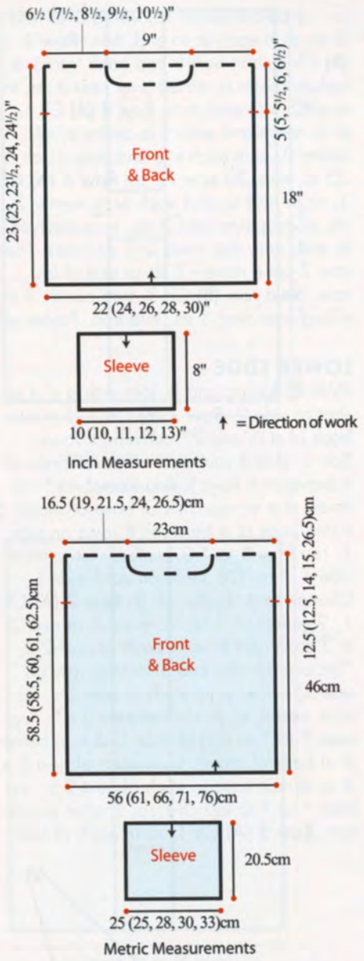

22 Spring Woodlands

●●●●

Shown on page 50.

Finished Measurements

- Wingspan approx 86"/218cm
- Length at center approx 26"/66cm

Materials

Noro/KFI Sonata 3.5oz/100g skeins each approx 393yd/359m (cotton/viscose/silk/polyamide)
- 2 balls in #18 Moss (A)

Noro Akari 7oz/200g balls, each approx 528yd/483m (silk/cotton/viscose/mohair/wool/polyamide)
- 1 ball in #05 Hamura (B)
- Size E-4 (3.5mm) crochet hook, OR SIZE TO OBTAIN GAUGE

Gauge

15 tr and 10 rows ([2 rows sc, 2 rows tr] twice and 2 rows sc) = 4"/10cm over pat st using size E-4 (3.5mm) hook.
TAKE TIME TO CHECK GAUGE.

Notes

1) Always end each row by working into the last tr or sc and *not* the starting ch.
2) Ch 1 and ch 3 at beg of row count as a st throughout but are not worked into at end of return. (side 1, side 2 and end section only)
3) Each row incs by 1 st for side 1 and 2.
4) Carry each color up through last tr or sc of each color-changing row and the chains at the start of each color changing-row.
5) Color B will inc by one in each row,
6) Color A will inc by 2 in each section. Ie. Both rows of each section will be the same and next section will be 2 more. These will be reversed for side 2.

SHAWL

SIDE 1

Row 1 (B) Ch 2, skip 1 ch (sc, ch 2, tr) in next ch, turn. **Row 2 (B)** Ch 3, (tr, ch 2, sc) in ch-2 sp, turn. **Row 3 (A)** Ch 3, (tr, ch 2, sc) in ch-2 sp, sc in next tr, turn. Do not work a st into turning ch.
Row 4 (A) Ch 1, sc in next sc, (sc, ch 2, tr) in ch-2 sp, tr in next tr, turn. (1ch, 2sc and 2tr). **Row 5 (B)** Ch 1, sc in next tr, (sc, ch 2, tr) in ch-2 sp, tr in each of next 2 sc, turn. (1ch, 2sc and 3tr). **Row 6 (B)** Ch 3, tr in each of the next 2 tr, (tr, ch 2, sc) in ch-2 sp, sc in each of the next 2 sc, turn. **Row 7 (A)** Ch 3, tr in each of the next 2 sc, (tr, ch 2, sc) in ch-2 sp, sc in each of the next 3 sc, turn.**Row 8 (A)** Ch 1, sc in next sc and each sc to ch-2 sp, (sc, ch 2, tr) in ch-2 sp, tr in each tr to end, turn. **Row 9 (B)** Ch 1, sc in next

tr and each tr to ch-2 sp, (sc, ch 2, tr) in ch-2 sp, tr in each sc to end, turn. **Row 10 (B)** Ch 3, tr in next tr and each tr to ch-2 sp, (tr, ch 2, sc) in ch-2 sp, sc in each sc to end, turn. **Row 11 (A)** Ch 3, tr in next sc and each sc to ch-2 sp, (tr, ch 2, sc) in ch-2 sp, sc in each tr to end, turn.
Rep rows (8—11) for 17 times—79 rows—40 sts on each side including starting chain. Fasten off both colors.

SIDE 2

Row 1 (B) Ch 5, skip 4 ch, sc in next ch, turn. **Row 2 (B)** Ch 1, (sc, ch 2, tr) in ch-4 sp, turn. **Row 3 (A)** Ch 1, (sc, ch 2, tr) in ch-2 sp, tr in next sc, turn. Do *not* work a st into turning ch. **Row 4 (A)** Ch 3, tr in next tr, (tr, ch 2, sc) in ch-2 sp, sc in next sc, turn. **Row 5 (B)** Ch 3, tr in next sc, (tr, ch 2, sc) in ch-2 sp, sc in each of next 2 tr, turn. **Row 6 (B)** Ch 1, sc in next 2 sc, (sc, ch 2, tr) in ch-2 sp, tr in each of next 2 tr, turn. **Row 7 (A)** Ch 1, sc in next 2 tr, (sc, ch 2, tr) in ch-2 sp, tr in each of next 3 sc, turn. **Row 8 (A)** Ch 3, tr in next tr and each tr to ch-2 sp, (tr, ch 2, sc) in ch-2 sp, sc in each sc to end, turn. **Row 9 (B)** Ch 3, tr in next sc and each sc to ch-2 sp, (tr, ch 2, sc) in ch-2 sp, sc in each tr to end, turn. **Row 10 (B)** Ch 1, sc in next sc and each sc to ch-2 sp, (sc, ch 2, tr) in ch-2 sp, tr in each tr to end, turn. **Row 11 (A)** Ch 1, sc in next tr and each tr to ch-2 sp, (sc, ch 2, tr) in ch-2 sp, tr in each sc to end, turn. Rep rows (8–11) for 17 times—79 rows—40 sts on each side including starting ch. Do *not* fasten off.

JOIN SIDE 1 TO SIDE 2

With RS facing up and A, slip-stitch tr sts tog by placing hook through back loop of tr on one side and the back loop of adjacent tr on other side and drawing yarn through both sts. Cont slip-stitching tr's tog to center space. Fasten off color A.
Note The sc sections are left unseamed to work the end section.

END SECTION

With WS, join A to first sc. **Row 1 (A)** Ch 1, sc in next sc and each sc to next ch-2 sp, sc2tog over next 2 ch spaces, sc into each sc to end Do *not* work a stitch into turning ch), turn. (1 ch, 39 sc, dec, 39 sc = 80 sts) Place marker in center stitch on each row. (Row 4 will have 2 center sts so place marker in the middle of these)
Each tr row will dec by 3 sts. Each sc row will dec by 2 sts. Ch still counts as a stitch but do not work into it on return row.
Row 2 (B) Ch 3, tr in next sc and each sc to 1 st before center sc, tr3tog over next 3 sts, tr in each sc to end, turn. **Row 3 (B)** Ch 3, tr in next tr and each tr to 1 st before center st, tr3tog over next 3 sts, tr in each tr to end, turn. **Row 4 (A)** Ch 1, sc in next tr and each tr to center st, skip center st, sc in each tr to end, turn. (1 ch, 35 sc, skip, 36 sc = 72 sts) **Row 5 (A)** Ch 1, sc in next sc and each sc to center 2 sts, sc2tog over next 2 sts, sc in each sc to end, turn. Rep rows 2–5 six times. Then row 2 once more—7 sts at end of last row. **Next row (B)** Ch 3, tr to center 3 sts, tr3tog over next 3 sts, tr to end. Fasten off.

LOWER EDGE

With RS facing and B, join with a sl st to start of side 2. **Row 1 (B)** Ch 1, 5 tr into base of st in row 2, (between tr rows) *ch 1, skip 4 row ends, 5 tr into base of st between tr rows*. Rep from * to * 26 times, sl st across 3 sts at base of shawl, 5 tr into base of st between tr rows on side 1; rep from * to * 27 times, sl st to tip of side 1, turn. (28 shells on each side.) Change to A. Fasten off B. **Row 2 (A)** Ch 1, 2 sc into ch-1 sp, sc in each of next 2 tr, 3 sc in next tr, sc in each of next 2 tr, *(sc over ch into end of next sc row on side 1) twice, sc in each of next 2 tr, 3 sc in next tr, sc in each of next 2 tr*. Rep from * to * to end of side 1, 5 tr in center st at base of shawl, sc in each of next 2 tr, 3 sc in next tr, sc in each of next 2 tr; rep from * to * to last ch-1 sp, 2 sc in space, turn. **Row 3 (A)** Ch 1, sc in each of next 5 sc, (sc, ch 2, sc) in next sc, *sc in each of next 3 sc, skip 2 sc, sc in each of next 3 sc (sc, ch 2, sc) in next sc*; rep from * to * 26 times, sc in each of next 5 sc, (sc, ch 2, sc) in next sc, sc in each of next 5 sc, (sc, 2 ch, sc) in next sc; rep from * to * to last 5 sts, sc in each of next 5 sc. Do *not* fasten off.

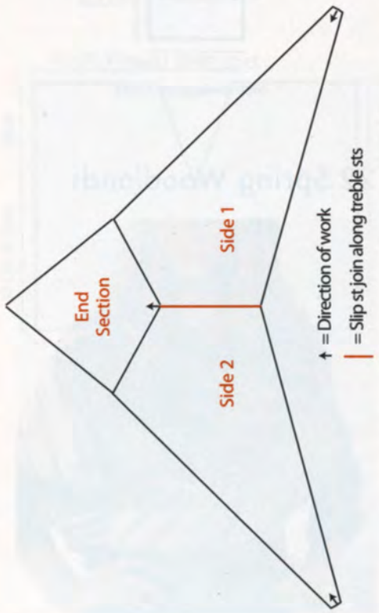

UPPER EDGE

Cont with A, work a row of sc evenly across the top of the shawl. Turn. Work 2 more rows of sc and then 1 row of reverse sc (from left to right).
Fasten off. ■

23 Turquesa Topper

Sized for X Small (Medium, Large, 1X, 2X, 3X) and show in size Small on page 51.

●●●○

Finished Measurements

- Bust 56 (58, 60, 62, 66, 68)"/142 (148, 152, 158, 168, 173)cm
- Length 19"/48cm

Materials

Noro/KFI *Silk Garden Sock* 3.5oz/100g balls, each approx 328yd/300m (wool/silk/ polyamide/mohair)
- 3 (4, 4, 5, 6,6) balls in #S459 Unzen
- Sizes E-4, G-6 and H-8 (3.5, 4, and 5mm) crochet hooks OR SIZE TO OBTAIN GAUGE

Gauge

15 sc and 15 rows to 4"/10cm using size H-8 (5mm) crochet hook.
TAKE TIME TO CHECK GAUGE.

Note

Center panel: Make one for back and one for front beg at hem edge and finishing at the neck. The back is longer than the front.

Stitched Used

Shell Work 5 dc all into 1 stitch.
3dc Cluster [Yo, insert hook in next st and pull up a lp, yo and pull through 2 lps, skip 1 st] 3 times, (4 lps on hook), yo and pull through all 4 lps.
2sctog Insert hook in first st and pull up a lp, insert hook in next st and pull up a lp (3 lps on hook), yo and pull through all ps—1 sc dec'd.

FRONT CENTER PANEL

With G-6 (4mm) hook, ch 38.
Row 1 1 shell in 4th ch from hook, *ch 1, skip 1 ch,1 dc in next ch, ch 1, skip ch 1, 1 dc in next ch, ch 1, skip ch 1, 3dc cluster, ch 1, skip 1 ch ,1 dc in next ch, ch 1, skip 1 ch, 1 dc in next ch, ch 1, skip ch 1, shell in next st; rep from * once more, skip 1 ch, 1 dc in last ch. Turn—3 shells and 2 x 3dc clusters.
Row 2 Ch 1, 2sctog, 1 sc in the top of each st and in each ch-1 sp to last 2 st, 2 sc tog. Turn—37sc.
Row 3 Ch 3, skip 1 st, 1 shell in next st, (that is, above the middle dc of the last odd row's shell), ch 1, skip 1 sc, *1 dc in next st, ch 1, skip 1 sc, 1 dc in next sc, ch 1, skip 1 sc, 3 dc cluster, skip 1 ch, 1 dc in next sc, ch 1, skip 1 sc, 1 dc in next sc, ch 1, skip 1 sc, shell in the next st; rep from *, end skip 1 sc, 1 dc in last st. Turn.
Row 4 Ch 1, 2sctog, 1 sc in top of each st and in each ch-1 sp to last 2 st, 2 sc tog. Turn—37 sc. Rep rows 3 and 4 until 42 rows have been worked. Fasten off.

BACK

Work as for front until 48 rows have been worked. Fasten off.

NECK AND SHOULDER JOINING

With H-8 (5mm) hook, join yarn to top of back and ch 20, join to front panel with a sl st and fasten off. Rep for second shoulder. Side panels are worked directly onto center panels out towards side seam using H-8 (5mm) hook **Row 1** Attach yarn at end of first sc row on hem of front panel by working 1 sc directly into end of sc row, *2 sc in end of dc row, 1 sc into end of sc row; rep from * along entire front panel, 1 sc into each of the 20 ch, 1 sc into end of sc row of back, **2 sc in end of dc row, 1 sc into end of sc row; rep from ** along entire back panel, Turn—155 sc (63 sc along front panel and 72 along back panel). **Rows 2– 41 (43, 45, 47, 49, 51)** Ch 1, sc *into front lp only* of each st to last st, work last sc under both lps for stability. Turn—155 sc.
Rep for second side panel by attaching yarn on bottom of back panel. Crochet side seams tog with sl st. Place a marker in 78th st from hem edge on each sc side for top of shoulder.

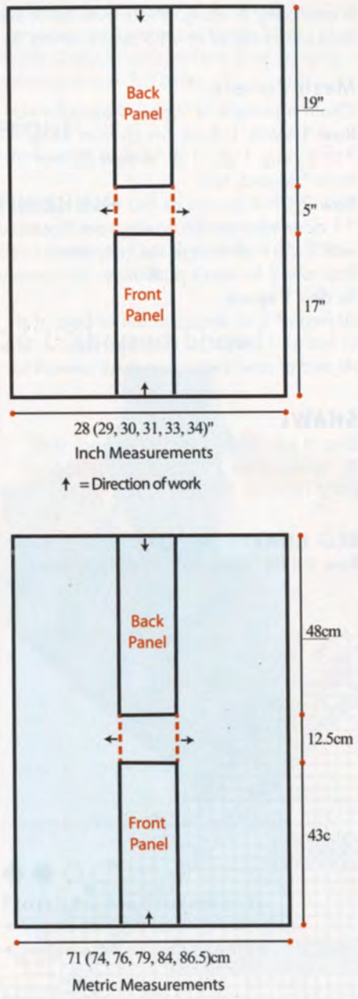

CUFFS

With H-8 (5mm) hook chain 30.
Row 1 Sc in 4th ch from hook, ch 1, skip ch 1, *sc in next st, ch 1, skip 1 ch; rep from * across, end sc in last ch. Turn.
Row 2 Ch 2, *sc in next ch-1 sp, ch 1, skip 1 sc; rep from * across, end sc in ch-3 space at end. Turn. **Rows 3–48 (50, 52, 54, 56, 58)** Ch 2, *sc in next ch-1sp, ch-1, skip 1 sc; rep from * across, end sc in ch-2 space at end. Turn. Mark row 24 (25, 26, 27, 28, 29) and match it to top of shoulder. Stitch cuff in place. Seam underarm and side seam.

NECKBAND

Attach yarn at shoulder using E–4 (3.5mm) hook. Work sc evenly around neck edge, do *not* join, work in a continuous spiral for next 3 rounds. **Rnds 2 and 3** Sc in *back loop only* of each st around. ■

24 Rose Matrix Shawl

Shown on page 52.

●●●●

Finished Measurements

- Width at top 72"/183cm
- Length at center of triangle 36"/91.5cm

Materials

Noro/KFI *Kumo* 3½oz/100g hanks, each approx 393yd/359m (viscose/cotton/silk/wool)
- 3 hanks each in #17 Nakano (pink–A) and #24 Hekinan (grey/green–B)
- Sizes D–3 and E–4 (3.25 and 3.5 mm) crochet hooks OR SIZE TO OBTAIN GAUGE

Gauge

12 mesh spaces and 12 mesh rows = 4"/10 cm over mesh pat using larger hook.
TAKE TIME TO CHECK GAUGE.

Notes

1) Each mesh square on chart represents 1 mesh or space (sp in color A); each X represents one block (bl) in color B, 3 dc in

B = 1 bl; each additional bl requires 2 dc.
2) Shawl is worked from top edge to bottom point. Dec 1 mesh at beg and end of every row for triangular shaping.
3) To follow chart, which represents one half of shawl, work from right (dec) edge to center st, omit center st and work from center back to right edge on same row.
4) When changing colors, use separate small balls of B for each color segment in B and carry A along. Work over the A end held along top of row (to avoid cutting A).

Mesh Pattern

Chain a multiple of 2 plus 4 extra for t-ch.
Row 1 Work 1 dc in 6th ch from hook, *ch 1, skip 1 ch, 1 dc in next ch; rep from * to end, turn.
Row 2 Ch 4 (counts as first mesh space), *1 dc in next dc, ch 1; rep from *, end with 1 dc in 3rd ch of the t-ch, turn.
Rep row 2 for mesh pattern.
To dec 1 space
At beg of row: do *not* chain at beg; sl st in first ch-1 space, sl st in next dc;
At end of row: Leave last mesh unworked.

SHAWL

Beg at top edge, with larger hook and A, tightly chain 390 to measure approx 65"/165cm.

BEG CHART

Row 1 (RS) Work 1 dc in 6th ch from hook (counts as first mesh sp), *ch 1, skip 1 ch, 1 dc in next ch; rep from * to end, turn—193 mesh sps. This is row 1 of chart which represents the first 96 mesh sps, center mesh sp, followed from left to right, last 96 mesh sps. **Row 2** Dec 1 sp, ch 4, work 1 dc in next dc, *ch 1, 1 dc in next dc; rep from * to last sp, leave this sp unworked (to dec 1 sp at end of row), turn. **Rows 3–97** Foll chart for color placement (with all color blocks in B and all mesh sps in A) so that on row 97, only one mesh sp remains. Do *not* cut A.

LEFT SIDE EDGE TRIM

Cont with attached A yarn from RS, fill in side edge with a trim to even off jagged edge as foll: *Ch 2, 1 sc in next side block of triangle; rep from * to top edge. Cut A. From RS, join A to work opposite right side of triangle, work *ch 2, 1 sc in next side block of triangle; rep from *, end with the last sc in the single block at point of triangle and leave 2 lps on hook. Cut A. **Rnd 1** Change to smaller hook. Pull B through last 2 A lps on hook ch 3, 2 dc in same corner, *2 dc in next sp, 3 dc in next sp*; rep between *'s to top edge, in corner work (ch 2, 1 dc and ch 2), work 2 dc in each ch-1 sp across top edge, in other top corner work (ch 2, 1 dc and ch 2); rep between *'s along lower side edge. Join. **Rnd 2** *Ch 2, work 1 sc between 2-dc and 3-dc cluster, ch 3, 1 sc between 3-dc and 2-dc cluster; rep from * to top corner, in corner work 2 sc in ch-2, ch 3, 2 sc in ch-2, across top work *ch 2, sc between 2-sc groups; rep from * to opposite corner, work corner as before, work other side of triangle as before end at point. Join with sl st to first sc. Fasten off. ■

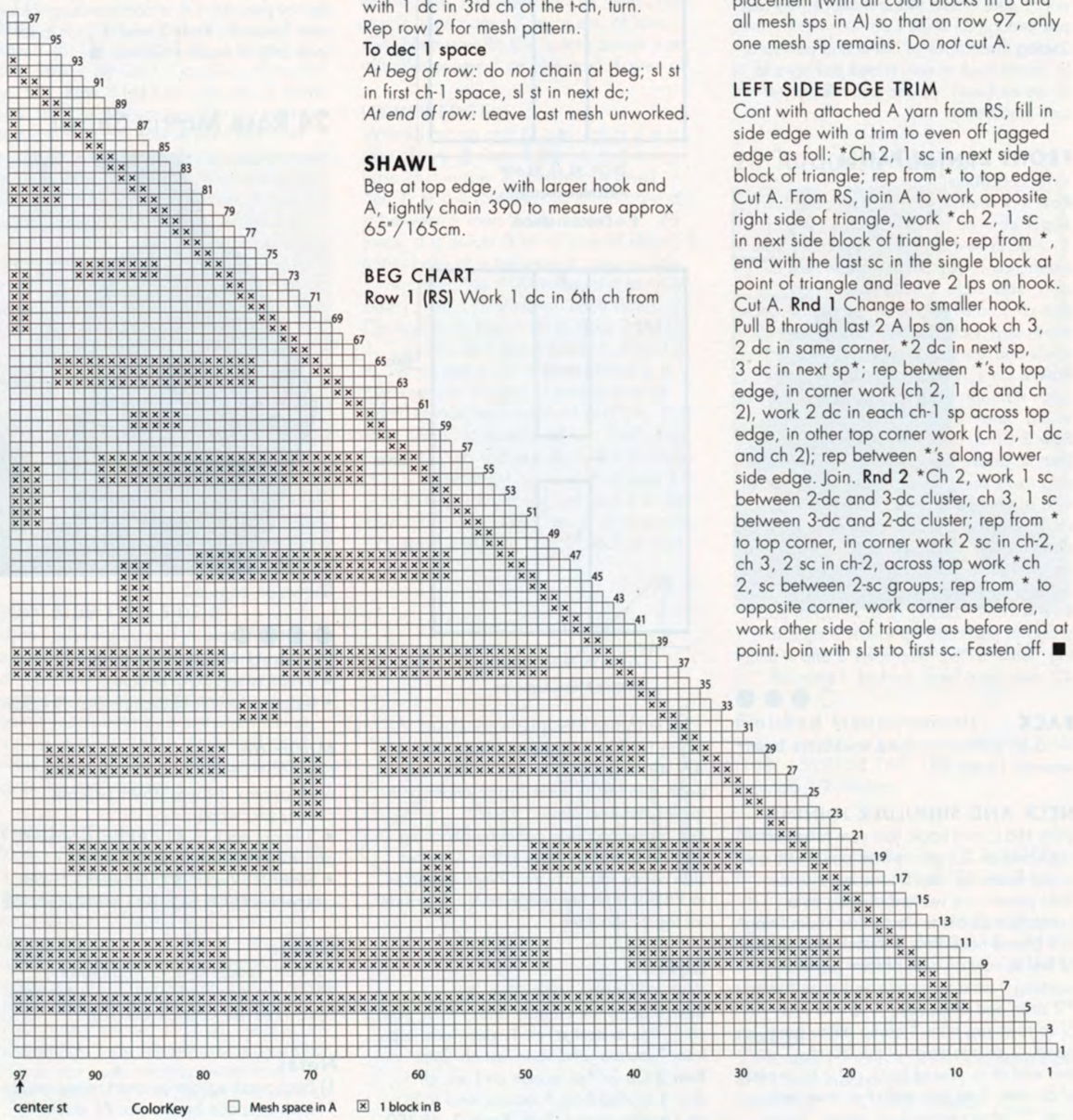

25 Pacifica Poncho

Sized for Small–Large (1X–2X, 3X–4X).
Shown in size Small/Large on page 53.

●●○○

Finished Measurements

- Width of back 32½ (34½, 37)"/82.5 (87.5, 94)cm
- Length 22½ (23¼, 24)"/57 (59, 61)cm

Materials

Noro/KFI *Kakigori* 7oz/200g balls, each approx 660yds/600m (cotton/silk/viscose/polyamide)
- 2 (2, 3) balls in #13 Fukuyama
- Size G–6 (4mm) crochet hook OR SIZE TO OBTAIN GAUGE
- Stitch markers

Gauge

13 sts and 9 rows = 4"/10 cm over Crossed Stitch using size 6 (4mm) needles. TAKE TIME TO CHECK GAUGE.

Stitches Used

2 crossed double crochet (2Cdc)
Skip next st, work 1 dc in next st, working over previous st work 1 dc in skipped st.

Crossed Stitch (even number of sts)
Row 1 (RS) Ch 1, (counts as 1 sc), skip 1 st, 1 sc in each st to end, working last sc in top of tch. Turn. **Row 2** Ch 3 (counts as 1 dc), skip 1 st, *work 2Cdc over next 2 sts; rep from *, end 1 dc in t-ch. Turn. Rep rows 1 and 2 and for crossed st.

BACK

Ch 105 (113, 121). Sc in 2nd ch from hook and in each ch to end—104 (112, 120) sts. Work 1 row of sc. Work in crossed st until piece measures 22½ (23¼, 24)"/57 (59, 61)cm from, ending with a pat row 2. Fasten off.

FRONT

Work same as back.

FINISHING

Block pieces to measurements. Sew shoulder seams, leaving center 10"/25cm unsewn for neck. ■

26 L-Shaped Shawl

Shown in size Small/Large on page 54.

●●○○

Finished Measurements

- Width of each side 16"/40.5cm
- Length of each long edge 48"/122cm

Materials

Noro/KFI *Silk Garden Sock Solo* 1¾/50g balls, each approx 110yd/100m (silk/mohair/wool)
- 4 skeins in #S1 Omitama
- One pair size 7 (4.5mm) needles, OR SIZE TO OBTAIN GAUGE
- Stitch markers

Gauge

22 sts and 28 rows = 4"/10cm over pattern st using size 7 (4.5mm) needles. TAKE TIME TO CHECK GAUGE.

Pattern Stitch

(over a multiple of 3 sts plus 14)
Row 1 (RS) P1, k1, p1, k4, *SK2P, yo twice; rep from * to last 7 sts, k4, p1, k1, p1. **Row 2** K2, p1, k1, p1, k2, *(p1, k1) in double yo, p1; rep from * to last 7 sts, k2, p1, k1, p1, k2. **Row 3** P1, k1, p1, k to last 3 sts, p1, k1, p1. **Row 4** K2, p1, k1, p1, k2, *SK2P, yo twice; rep from * to last 7 sts, k2, p1, k1, p1, k2. **Row 5** K1, p1, k1 k4, *(p1, k1) in double yo, p1; rep from * to last 7 sts, k4, p1, k1, p1. **Row 6** K2, p1, k1, p1, k to last 5 sts, p1, k1, p1, k2: Rep rows 1–6 for pat st.

SHAWL FIRST HALF

Cast on 89 sts. **Row 1** P1, *k1, p1; rep from * to end. **Row 2** K the purl sts and p the knit sts. Rep row 2 for seed st for 4 rows more. Work in pat st until piece measures 15"/38cm from beg, end with a row 6. Work 6 rows in seed st.
Place a marker at beg of last row (at left edge), do *not* slip this marker.
Cont in pat st until piece measures 31"/78.5cm from marker, end with a row 5. Work 6 rows in seed st. Bind off.

SECOND HALF

With RS facing, beg at marker, pick up and k 89 sts along left side edge of first half to cast-on edge. Work in pat st until second half measures 31"/78.5cm from pick-up row, end with a row 5. Work 6 rows in seed st. Bind off. Block lightly to measurements. ■

27 Crewneck Pullover

Sized for Small (Medium, Large, X-Large, XX-Large) and shown in size Medium on page 56.

●●○○

Finished Measurements

- Bust 36 (40½, 44, 48, 52)"/91.5 (103, 111.5, 122, 132)cm

• Length 24½ (25, 25, 25½, 26)"/62 (63.5, 63.5, 64.5, 66)cm
• Upper arm 16 (17, 17, 18, 19)"/40.5 (43, 43, 45.5, 48)cm

Materials
Noro/KFI *Silk Garden Solo* 1¾/50g balls, each approx 110yd/100m (silk/mohair/wool)
10 (11, 12, 13, 15) balls in #1 Omitama
• One pair each sizes 7 and 8 (4.5 and 5mm) needles, OR SIZE TO OBTAIN GAUGE
• Size 7 (4.5mm) circular needle, 16"/40cm long
• Stitch markers and stitch holders

Gauge
21 sts and 21 rows = 4"/10cm over bamboo stitch using larger needles.
TAKE TIME TO CHECK GAUGE.

3-Needle Bind-Off
(See Pattern #16

Bamboo Stitch
(multiple of 2 sts plus 2)
Row 1 (RS) K1 (selvage st), *yo, k2, pass yo over 2 knit sts; rep from * to last st, k1 (selvage st). **Row 2** Purl.
Rep rows 1 and 2 for bamboo stitch.

BACK
With smaller needles, cast on 93 (105, 115, 125, 135) sts. **Row 1 (RS)** K1, *p1, k1; rep from * to end. Cont in k1, p1 rib as established for 9 rows more, inc 1 st on last row—94 (106, 116, 126, 136) sts. Change to larger needles and work in bamboo st until piece measures 16½"/42cm from beg. Place markers each side of last row for armhole.
Cont in pat until armhole measures 5¾ (6¼, 6¼, 6¾, 7¼)"/14.5 (16, 16, 17, 18.5) cm from markers, end with a WS row.

SHAPE NECK
Next row (RS) Work 37 (43, 48, 52, 57) sts in pat, join 2nd ball of yarn, bind off center 20 (20, 20, 22, 22) sts, work to end. Working both sides at once, bind off 5 sts from each neck edge once, 3 sts twice, 2 sts twice—22 (28, 33, 37, 42) sts rem each side. Work even until armhole measures 8 (8½, 8½, 9, 9½)"/20.5 (21.5, 21.5, 23, 24)cm, end with a WS row. Place sts each side on holders.

FRONT
Work as for back until armhole measures 3 (3½, 3½, 4, 4½)"/7.5 (9, 9, 10, 11.5cm from markers, end with a WS row.

SHAPE NECK
Next row (RS) Work 42 (48, 53, 57, 62) sts in pat, join 2nd ball of yarn and bind off center 10 (10, 10, 12, 12) sts, work to end. Working both sides at once, bind off 3 sts from each neck edge 6 times, then 2 sts once—22 (28, 33, 37, 42) sts rem each side. Work even in pat until armhole measures 8 (8½, 8½, 9, 9½)"/20.5 (21.5, 21.5, 23, 24)cm, end with a WS row. Place sts each side on holders.

SLEEVES
With smaller needle, cast on 79 (85, 85, 87, 87) sts. Work in k1, p1 rib as for back for 10 rows, inc 1 st on last row—80 (86, 86, 88, 88) sts. Change to larger needles and work in bamboo st, inc 1 st each side every 8th (8th, 8th, 8th, 4th) row 2 (2, 2, 3, 6) times—84 (90, 90, 94, 100) sts. Work even until piece measures 8 (8, 8½, 8½, 9)"/20.5 (20.5, 21.5, 21.5, 23)cm from beg, end with a RS row. Bind off purlwise on WS.

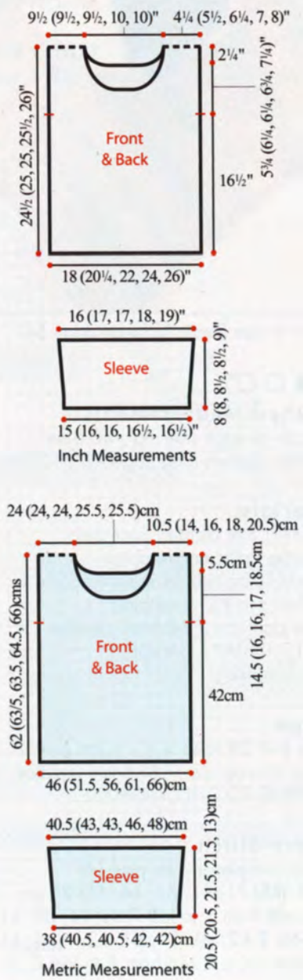

FINISHING
Block pieces lightly to measurements. Join shoulders using 3-needle bind-off. Center tops of sleeves at shoulder seam and sew between armhole markers. Sew side and sleeve seams.

NECK BAND
With RS facing and circular needle, beg at right shoulder seam, pick up and k 16 sts along shaped right back neck, 20 (20, 20, 22, 22) sts along back neck edge, 16 sts along shaped left back neck, 20 sts along shaped left front neck, 10 (10, 10, 12, 12) sts along front neck, 20 sts along shaped right front neck—102 (102, 102, 106, 106) sts. Join and place marker for beg of rnd. **Rnd 1** *K1, p1; rep from * around. Rep rnd 1 for k1, p1 rib for 8 rnds more. Bind off in pat. ■

28 Cropped Cardi

Sized for Small (Medium, Large, X-Large, XX-Large) and shown in size Small on page 56.

●●○○

Finished Measurements
• Bust 36 (40, 44, 48, 52)"/91.5 (101.5, 111.5, 122, 132)cm
• Length excluding zig zag hem 17 (18, 19, 20, 21)"/43 (45.5, 48, 51, 53.5)cm
• Upper arm 11¼ (12, 12¾, 14, 14¾)"/28.5 (30.5, 32.5, 35.5, 37.5)cm

Materials
Noro/KFI *Silk Garden Sock Solo* 3½oz/100g balls, each approx 328yd/300m (wool/silk/ polyamide/mohair)
• 3 (3, 4, 4, 5) skeins in #S1 Omitama
• One pair size 6 (4mm) needles, OR SIZE TO OBTAIN GAUGE
• One size 6 (4mm) circular needle, 16"/40cm long
• Two size 6 (4mm) double-pointed needles (dpn)
• Stitch holders and stitch markers
• Seven ¾"/20mm buttons

Gauge
20 sts and 30 rows = 4"/10cm over St st using size 6 (4mm) needles.
TAKE TIME TO CHECK GAUGE.

Short Row Wrap & Turn (w&t)
(See Pattern #TK)

3-Needle Bind-Off
See Pattern #16

Note
Zig zag hem is worked after cardigan is complete. Hem is joined to lower edge of cardigan as it is worked.

BACK
Cast on 90 (100, 110, 120, 130) sts. Work in St st (k on RS, p on WS) until piece measures 9 (9½, 10, 10½, 11)"/23 (24, 25.5, 26.5, 28)cm from beg, end with a WS row.

SHAPE ARMHOLE
Bind off 6 (8, 10, 12, 14) sts at beg of next 2 rows. Dec 1 st each side on next row, then every other row 5 (7, 9, 11, 13) times more—66 (68, 70, 72, 74) sts. Work even in St st until armhole measures 7 (7½, 8, 8½, 9)"/18 (19, 20.5, 21.5, 23)cm, end with a WS row.

SHAPE SHOULDERS
Short row 1 (RS) K to last 5 (5, 5, 6, 6) sts, w&t. **Short row 2** P to last 5 (5, 5, 6, 6) sts, w&t. **Short row 3** K to last 10 (10, 10, 12, 12) sts, w&t. **Short row 4** P to last 10 (10, 10, 12, 12) sts, w&t. **Short row 5** K to last 15 (16, 17, 18, 19) sts, w&t. **Short row 6** P to last 15 (16, 17, 18, 19) sts, w&t.
Next row Knit to end, picking up wraps.
Next row Purl to end, picking up wraps.
Place first 15 (16, 17, 18, 19) sts on st holder for shoulder, place center 36 sts on 2nd st holder for back neck and rem 15 (16, 17, 18, 19) sts on 3rd st holder for shoulder.

LEFT FRONT
Cast on 45 (50, 55, 60, 65) sts. Work in St st until piece measures 9 (9½, 10, 10½, 11)"/23 (24, 25.5, 26.5, 28)cm from beg, end with a WS row.

SHAPE ARMHOLE
Bind off 6 (8, 10, 12, 14) sts at armhole edge (beg of RS rows). Work 1 WS row. Dec 1 st at armhole edge on next row, then every other row 5 (7, 9, 11, 13) times more—33 (34, 35, 36, 37) sts. Work even until armhole measures 4 (4½, 5, 5½, 6)"/10 (11.5, 12.5, 14, 15)cm, end with a RS row.

SHAPE NECK
Bind off 6 sts at neck edge (beg of WS rows) once, then 3 sts 4 times—15 (16, 17, 18, 19) sts. Work even until armhole measures same as back to shoulder, end with a WS row.

SHAPE SHOULDER
Row 1 Knit. **Short row 2** P to last 5 (5, 5, 6, 6) sts, w&t. **Row 3** Knit to end.
Short row 4 P to last 10 (10, 10, 12, 12) sts, w&t. **Row 5** Knit to end.
Row 6 Purl to end, picking up wraps.
Place sts on st holder.

RIGHT FRONT
Cast on 45 (50, 55, 60, 65) sts. Work in St st until piece measures 9 (9½, 10, 10½, 11)"/23 (24, 25.5, 26.5, 28)cm from beg, end with a RS row.

SHAPE ARMHOLE
Bind off 6 (8, 10, 12, 14) sts at armhole edge (beg of WS rows). Dec 1 st at armhole edge on next row, then every other row 5 (7, 9, 11, 13) times more—33 (34, 35, 36, 37) sts. Work even until armhole measures 4 (4½, 5, 5½, 6)"/10 (11.5, 12.5, 14, 15)cm, end with a WS row.

SHAPE NECK
Bind off 6 sts at neck edge (beg of RS rows) once, then 3 sts 4 times—15 (16, 17, 18, 19) sts. Work even until armhole measures same as back to shoulder, end with a WS row.

SHAPE SHOULDER
Short row 1 K to last 5 (5, 5, 6, 6) sts, w&t. **Row 2** Purl to end. **Short row 3** K to last 10 (10, 10, 12, 12) sts, w&t.
Row 4 Purl to end. **Row 5** Knit to end, picking up wraps. **Row 6** Purl.
Place sts on st holder.

SLEEVES
Cast on 45 (47, 49, 51, 53) sts.
Row 1 (RS) K1, *p1, k1; rep from * to end. Cont in k1, p1 rib as established for 3 rows more. Next row Knit, inc 1 st—46 (48, 50, 52, 54) sts. Cont in St st, inc 1 st each side every 10th (10th, 8th, 6th, 6th) row 5 (6, 7, 9, 10) times—56 (60, 64, 70, 74) sts. Work even until piece measures 9 (9½, 10, 10½, 11)"/23 (24, 25.5, 26.5, 28)cm from beg, end with a WS row.

SHAPE CAP
Bind off 6 (8, 10, 12, 14) sts at beg of next 2 rows. Work 8 (12, 16, 16, 20) rows even. Dec 1 st each side of next

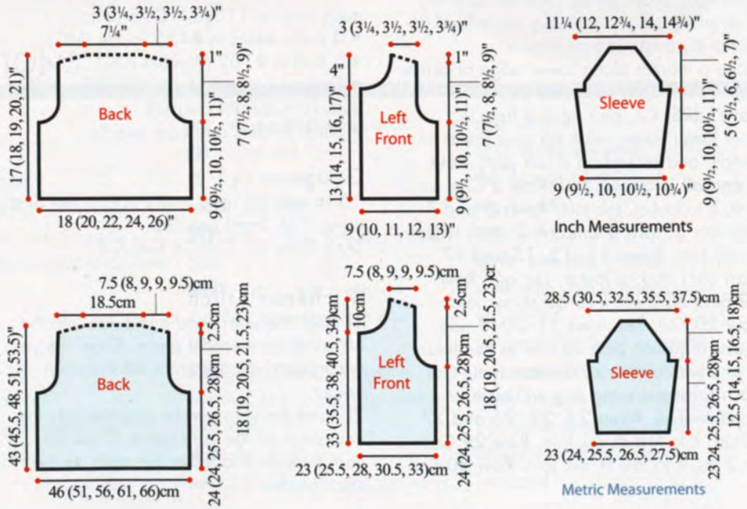

row, then every other row 13 (13, 13, 14, 14) times more—16 sts. Work 1 WS row. Bind off.

FINISHING
Join shoulders using 3-needle bind off, leaving 36 back neck sts on st holder. Set in sleeves. Sew side and sleeve seams.

NECKBAND
With RS facing and circular needle, beg at right front neck edge, pick up and k31 (33, 37, 39, 43) sts along right front neck edge to shoulder, k36 sts from back neck holder, pick up and k31 (33, 37, 39, 43) sts along left front neck edge—98 (102, 110, 114, 122) sts. Knit 3 rows. Bind off.

BUTTON BAND
With RS facing and circular needle, beg at neck edge, pick up and k 66 (71, 76, 81, 86) sts evenly along left front edge. Knit 7 rows. Bind off. Mark placement for 7 buttons, with first and last approx ½"/1.5cm from neck and lower edges, and the rem 5 spaced evenly between.

BUTTONHOLE BAND
With RS facing and circular needle, beg at lower edge, pick up and k 66 (71, 76, 81, 86) sts evenly along right front edge. Knit 3 rows.
Next row (RS) K, working buttonholes (yo, k2tog) to correspond to markers. Knit 3 rows. Bind off. Sew buttons to button band opposite buttonholes.

ZIG ZAG HEM
Note Hem is worked perpendicular and joined to picked-up sts along lower edge, beg at left front and working around to right front. Pick up approx 4 sts for every 5 sts along edge, adjusting as needed to match zig zags at side edges.
Place a marker along lower edge at center back. With dpn, cast on 3 sts.
Row 1 (RS) K2, pick up 1 st from left front lower edge, work ssk over last st on needle and picked up st (ssk join). **Row 2 and all WS** rows Knit. **Row 3** Cast on 1 st, k to last st, ssk join. **Rows 5 and 7** Rep row 3. **Row 9** Bind off 2 sts, k to last st, ssk join. **Rows 11, 13, 15 and 17** Cast on 1 st, k to last st, ssk join. **Row 19** Bind off 2 sts, k to last st, ssk join. **Row 20** Knit. Rep rows 11–20 to side seam, adjusting pick up rate as necessary to end with a row 20 at seam (note that each subsequent zig zag will have an additional st). **Rows 21, 23, 25 and 27** K2tog, k to last st, ssk join. **Row 29** Cast on 2 sts, k to last st, ssk join. **Row 30** Knit. Rep rows 21–30 to center back marker, adjusting pick up rate as necessary to end with a row 30 at marker (note that each subsequent zig zag will have 1 less stitch). Rep rows 11–20 to side seam, then rep rows 21–30 to right front lower edge, ending with a row 28 to mirror left front edge. Bind off. Lightly block edging. ■

29 Love Noro

Shown on page 96.

●●●○

Finished Measurements
- Width 11"/28cm
- Length 75"/190cm

Materials
Noro/KFI *Kureyon*, 3½oz/100g skeins, each approx 110yd/100m (wool)
- 4 balls skeins in #425 Toride (MC)
- 1 ball in #102 Miyama (CC)
- One pair size 7 (4.5mm) needles OR SIZE TO OBTAIN GAUGE
- Stitch holders and yarn needle

Gauge
16 sts and 21 rows = 4"/10cm over St st using 7 (4.5mm) needles.
TAKE TIME TO CHECK GAUGE.

Kitchener Stitch
1) Insert the yarn needle knitwise into the first stitch on the front piece. Draw the yarn through and slip the stitch off the stitch holder.
2) Insert the yarn needle purlwise into the next stitch on the front piece. Draw the yarn through and leave the stitch on the stitch holder.
3) Insert the yarn needle purlwise into the first stitch on the back piece. Draw the yarn through and slip the stitch off the needle.
4) Insert the yarn needle knitwise into the next stitch on the back piece. Draw the yarn through and leave the stitch on the needle.
Repeat steps 1 through 4.

Notes
1) Scarf is made in two halves, and joined tog in center using Kitchener Stitch.
2) Work heart chart pattern in Intarsia, that is, use separate balls of MC, each side of the heart motif.

FIRST HALF
With MC, cast on 43 sts.
****Row 1 (RS)** Sl 1 wyib, [k1, p1] twice (5-st border), knit to last 5 sts, [p1, k1] twice, p1 (5-st border). **Row 2 (WS)** Sl 1 wyif, [p1, k1] twice, purl to last 5 sts, [k1, p1] twice, p1. Rep last 2 rows 3 times more**. Work chart as foll:
Row 1 (RS) Cont 5-st border, work row 1 of chart over 33 sts, cont 5-st border. Cont in pats as established through chart row 28. Rep between **'s (8 rows) once. Rep last 44 rows twice more. Cont with MC only, keeping 5-st border each side, until piece measures 37.5"/95cm from beg. Place sts on a holder.

SECOND HALF
Work same as first half.

FINISHING
Block to measurements. Join open sts of both halves using Kitchener st. ■

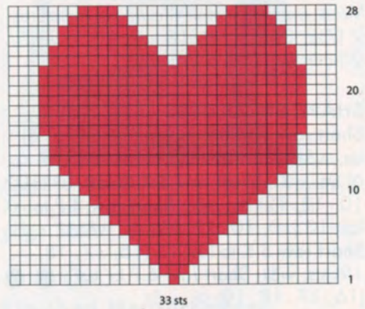

Stitch and Color Key
- □ k on RS, p on WS with MC
- ■ k on RS, p on WS with CC
- ⊟ p on RS, k on WS with MC
- ⊡ slip 1 wyib on RS, slip 1 wyif on WS with MC

SKILL LEVELS

●○○○
BASIC
Projects using basic stitches. May include basic increases and decreases

●●○○
EASY
Projects may include simples stitches, color work and/or shaping.

●●●○
INTERMEDIATE
Projects may include involved stitch patterns, color work and/or shaping.

●●●●
COMPLEX
Projects may include complex stitches, color work and/or shaping, using a variety of techniques and stitches simultaneously.

CROCHET HOOKS

US	METRIC
B/1	2.25mm
C/2	2.75mm
D/3	3.25mm
E/4	3.5mm
F/5	3.75mm
G/6	4mm
7	4.5mm
H/8	5mm
I/9	5.5mm
J/10	6mm
K/10½	6.5mm
L/11	8mm
M/13	9mm
N/15	10mm

KNITTING NEEDLES

US	METRIC
0	2mm
1	2.25mm
2	2.75mm
3	3.25mm
4	3.5mm
5	3.75mm
6	4mm
7	4.5mm
8	5mm
9	5.5mm
10	6mm
10½	6.5mm
11	8mm
13	9mm
15	10mm
17	12.75mm
19	15mm
35	19mm

GAUGE

Knitting gauge—the number of stitches and rows per inch—determines the size of the garment you are making. Every knitting pattern states the gauge, or "tension," on which the sizing is based. For successful results, it is essential to test your knitting against this measurement before you start a project. Make a test swatch at least 4"/10cm square, using the yarn and needle size called for in the pattern. Then measure your swatch using a ruler or a knit gauge tool. If the number of stitches and rows does not match the pattern's gauge, you must change your needle size. An easy rule to follow is:
TO GET FEWER STITCHES TO THE INCH/CM, USE A LARGER NEEDLE;
TO GET MORE STITCHES TO THE INCH/CM, USE A SMALLER NEEDLE.
Try different needle sizes until you get the proper stitch and row gauge.

METRIC CONVERSIONS

To convert inches to centimeters, just multiply by 2.54.

KNITTING ABBREVIATIONS

approx approximately
beg begin(ning)
CC contrasting color
cm centimeter(s)
cn cable needle
cont continue(ing)
dec decrease(ing)
dpn double-pointed needle(s)
foll follow(s)(ing)
g gram(s)
inc increase(ing)
k knit
kfb knit into front and back of stitch
LH left-hand
m meter(s)
mm millimeter(s)
MC main color
M1 make one (see glossary)
M1 p-st make one purl stitch (see glossary)
oz ounce(s)
p purl
pat(s) pattern(s)
pm place marker
psso pass slip stitch(es) over
rem remain(s)(ing)
rep repeat
rev reverse stockinette stitch
RH right-hand
RS right side
rnd(s) round(s)
SKP slip 1, knit 1, pass slip stitch over
SK2P slip 1, knit 2 stitches together, pass slip stitch over k2tog
S2KP slip 2 stitches together knitwise, knit 1, pass slip stitches over knit 1
sl st slip stitch
ssk slip, slip, knit (see glossary)
st(s) stitch(es)
St st stockinette stitch
tbl through back loop
tog together
WS wrong side(s)
wyib with yarn in back
wyif with yarn in front
yd yard(s)
yo yarn over (hook or needle)
* repeat directions following * as many times as indicated
[ ] repeat directions inside brackets as many times as indicated

CROCHET ABBREVIATIONS

BP back post
BPdc back post double crochet
BPsc back post single crochet
BPtr back post treble crochet
ch chain(s)
ch- refers to chain or space previously made (i.e., ch-1 space)
ch-sp chain space previously made
dc double crochet (U.K.: tr—treble)
dc2tog double crochet 2 stitches together
dtr double treble (U.K.: trtr—triple treble)
FP front post
FPdc front post double crochet
FPsc front post single crochet
FPtr front post treble crochet
grp(s) group(s)
hdc half double crochet (U.K.: htr— half treble)
lp(s) oop(s)
sc single crochet (U.K.: dc —double crochet)
sc2tog single crochet 2 stitches together
sk skip(ped)
sl st slip stitch (U.K.: sc—single crochet)
sp(s) space(s)
t-ch turning chain
tr treble (U.K.: dtr—double treble)
trtr triple treble (U.K.: qtr—quadruple treble)

STANDARDS & GUIDELINES FOR CROCHET AND KNITTING

STANDARD YARN WEIGHT SYSTEM

Categories of yarn, gauge ranges, and recommended needle and hook sizes

Yarn Weight Symbol & Category	0 Lace	1 Super Fine	2 Fine	3 Light	4 Medium	5 Bulky	6 Super Bulky	7 Jumbo
Type of Yarns in Category	Fingering 10-count crochet thread	Sock, Fingering, Baby	Sport, Baby	DK, Light Worsted	Worsted, Afghan, Aran	Chunky, Craft, Rug	Super Bulky, Roving	Jumbo, Roving
Knit Gauge Range* in Stockinette Stitch to 4 inches	33–40** sts	27–32 sts	23–26 sts	21–24 sts	16–20 sts	12–15 sts	7–11 sts	6 sts and fewer
Recommended Needle in Metric Size Range	1.5–2.25 mm	2.25–3.25 mm	3.25–3.75 mm	3.75–4.5 mm	4.5–5.5 mm	5.5–8 mm	8–12.75 mm	12.75 mm and larger
Recommended Needle U.S. Size Range	000–1	1 to 3	3 to 5	5 to 7	7 to 9	9 to 11	11 to 17	17 and larger
Crochet Gauge* Ranges in Single Crochet to 4 inch	32–42 double crochets**	21–32 sts	16–20 sts	12–17 sts	11–14 sts	8–11 sts	6–9 sts	5 sts and fewer
Recommended Hook in Metric Size Range	Steel*** 1.6–1.4 mm	2.25–3.5 mm	3.5–4.5 mm	4.5–5.5 mm	5.5–6.5 mm	6.5–9 mm	9–16 mm	16 mm and larger
Recommended Hook U.S. Size Range	Steel*** 6, 7, 8 Regular hook B–1	B–1 to E–4	E–4 to 7	7 to I–9	I–9 to K–10 1/2	K–10 1/2 to M–13	M–13 to Q	Q and larger

* GUIDELINES ONLY: The above reflect the most commonly used gauges and needle or hook sizes for specific yarn categories.

** Lace weight yarns are usually knitted or crocheted on larger needles and hooks to create lacy, openwork patterns. Accordingly, a gauge range is difficult to determine. Always follow the gauge stated in your pattern.

*** Steel crochet hooks are sized differently from regular hooks—the higher the number, the smaller the hook, which is the reverse of regular hook sizing

This Standards & Guidelines booklet and downloadable symbol artwork are available at: **YarnStandards.com**

GLOSSARY

bind off
To finish off an edge and keep stitches from unraveling by lifting the first stitch over the second, the second over the third, etc. (U.K.: cast off)

bind off in ribbing
Maintain the rib pattern as you bind off (knit the knit stitches; purl the purl stitches). (U.K.: cast off in ribbing)

cast on
Form a foundation row by making specified number of loops on the knitting needle.

decrease
Reduce the number of stitches in a row (i.e., knit 2 together; purl 2 together).

increase
Add to the number of stitches in a row (i.e., knit in front and back of stitch).

knitwise
Insert the needle into the stitch as if you were going to knit it.

make one
Insert tip of LH needle from front to back under the strand between the last stitch worked and the next stitch on the needle. Knit into the back loop to increase one stitch.

make one purl stitch
With the needle tip, lift the strand between the last stitch worked and the next stitch on left-hand needle and purl it. One purl stitch has been added.

no stitch
On some charts, "no stitch" is indicated with shaded spaces where stitches have been decreased or not yet made. In such cases, work the stitches of the chart, skipping over the "no stitch" spaces.

place markers
Loop a piece of contrasting yarn or a purchased stitch marker onto the needle.

pick up and knit (purl)
Knit (or purl) into the loops along an edge.

purlwise
Insert the needle into the stitch as if you were going to purl it.

selvage stitch
Edge stitch that helps make seaming easier.

skip
Skip specified number of stitches of the previous row and work into next stitch. (U.K.: miss)

slip, slip, knit
Slip next two sts knitwise, one at a time, to right-hand needle. Insert tip of left-hand needle into fronts of these sts from left to right and knit them together to decrease one stitch.

slip stitch
In knitting, pass a stitch from the left-hand to the right-hand needle as if to purl without working it.
In crochet, insert hook through loop or edge, yarn over and pull through loop on hook. (U.K.: abbreviation — ss or sc)

work even
Continue in specified pattern without increasing or decreasing. (U.K.: work straight)

yarn over
In knitting, make a new stitch by placing the yarn over the right-hand needle. (U.K.: yfwd, yon, yrn) In crochet, wind yarn around hook. (U.K.: yoh or yrh)

AUSTRALIA

Yarn & Gifts
Beecroft, NSW 2119
+61 28 407 95 12

Weave Bellingen
Bellingen, NSW 2454
+61 26 65 52 02 02
weavebellinben.com.au

Polka Dot Tea
Bombala, NSW 2632
+61 40 36 59 805
polkadottea.net

Fibre Frolic
Cranebrook, NSW 2749
+61 40 00 36 833
fibrefrolic.com.au

Skein Sisters
Dulwich Hill, NSW 2203
+61 29 55 47 444
skeinsisters.com.au

Pins + Needles
Merimbula, NSW 2548
+ 61 26 49 53 646

The Wool Inn
Penrith, NSW 2750
+ 61 24 73 22 201
the-wool-inn.com.au

Tijuana Alpacas
Razor Back, NSW 2571
+ 61 41 82 03 257
tijuana-alpacas.com.au

Yarnish
South Windsor, NSW 2756
+61 46 66 34 966
yarnish.com.au

Hornsby Wool & Craft Nook
Sydney, NSW 2077
+61 29 48 24 924

I Wool Knit
Wamboin NSW 2620
+61 40 68 86 347
iwoolknit.com.au

John Watts Sewing Machines
Booval, QLD 4304
+61 73 28 24 711
johnwattssewing.com.au

Yarn Glorious Yarn
Brisbane, QLD 4068
+61 48 37 43 64
yarngloriousyarn.com.au

Tinsimink
Brookfield, QLD 4069
+61 41 32 25 094
tinsimink.com.au

Prudence Mapstone
Daisy Hill, QLD 4127
+61 73 20 85 752
knotjustknitting.com

The Art and Craft Cottage
Ipswich, QLD 4305
+ 61 73 28 18 702
theartandcraftcottage.com.au

House of Cloth
Bendigo, VIC 3550
+61 04 00 69 74 97
houseofclothe.com.au

Yarn Magic
Berwick, VIC 3806
+61 43 29 93 885
yarnmagic.com.au

Sunspun
Canterbury, VIC 3126
+61 39 83 01 609
sunspun.com.au

Amano by Lorena Laing
Carlton North, VIC 3054
+61 42 15 81 556
lorenalaing.com

March Yarns
Colac, VIC 3250
+61 52 31 36 52
marchyarns.com.au

Little Woollie Makes Yarn Store
Crib Point, VIC 3919
+61 41 70 93 021
littlewoolliemakes.com.au

Woolsy Trading Post
Geelong West, VIC 3218
+61 35 22 21 571
woolsytradingpost.com.au

Unwind Craft Cafe
Keilor East, VIC 3003
+61 41 75 06 018
unwindcraftcafe.com.au

Stitches N Things
Lakes Entrance, VIC 3909
+61 35 15 52 021
stitchesnthings.com.au

Kaye Adolphson Designs & Yarns
Lilydale, VIC 3140
+61 38 20 10 332
kayeadolphson.wixsite.com/designs-and-yarns

Wondoflex Yarn Craft Centre
Malvern, VIC 3144
+61 39 82 26 231
wondoflex.com.au

Knitting Co.
Malvern East, VIC 3145
+61 40 08 56 657
knittingco.com.au

Mornington Wool & Patchwork
Mornington, VIC 3931
+61 35 97 54 257
woolandpatchwork.com.au

Red Heart Designs
Mount Dandenong, VIC 3767
+61 41 83 27 390

Craftee Cottage
Oakleigh, VIC 3166
+61 39 56 83 606
crafteecottage.com.au

Woolybutt Knitting
Rosanna, VIC 3084
+61 39 45 83 101
woolybutt.com.au

Cotton & Wool Craft
Rosedale, VIC 3847
+61 48 86 80 959

The Wool Shop
Surrey Hills, VIC 3127
+61 39 83 69 614
thewoolshop.com

Yarninspired
Adelaide, SA 5091
+61 44 90 21 693
yarninspired.com

Yarn Trader
Port Adelaide, SA 5051
+61 45 88 19 857

BELGIUM

BedFlex International
Brussels 1180
bflex@skynet.be

Do's Store
Brasschaat 2930
+32 3 647 14 25
do-store.be

BULGARIA

Statex LTD
Plovdiv 4000
+35932643000
pleta.bg

CANADA

ALBERTA

A Nest of Needles Wool Shop
Blairmore, AB T0K 0E0
(403) 564-4041
anestofneedles.ca

Gina Brown's
Calgary, AB T2H 0E8
(403) 255-2200
ginabrowns.com

Stash Lounge
Calgary, AB T2G 0S9
(403) 457-0766
stashlounge.com

The Knitting Room
Calgary, AB T2L 1H2
(403) 288-1959
theknittingroom.com

River City Yarns
Edmonton, AB T5M 4C9
(780) 477-9276
rivercityyarns.com

Knitting Time
Lethbridge, AB T1H 0E4
(403) 320-5648
knittingtime.com

Unwind Wool Shop
Okotoks, AB T1S 1A8
(587) 757-9679

Jo's Yarn Garden
Stony Plain, AB T7Z 1Y4
(780) 963-1559

BRITISH COLUMBIA

The Twisted Purl Yarn Studio
Armstrong, BC V9L 6E1
(250) 746-5250

Village Yarn Shoppe
Comox, BC V9M 3N1
(250) 339-2474
villageyarnshoppe.ca

The Loom
Duncan, BC V9L 6E1
(250) 746-5250

Art of Yarn
Kelowna, BC V1Y 1W3
(250) 717 3247
artofyarn.com

Mad About Ewe Fine Yarns
Nanaimo, BC V9R 2T5
(250) 754-0785
madaboutewe.ca

Berkana Wool Shop
Nelson, BC V1L 4B7
(778) 463-1053
berkanawool.ca

Knitter's Nest
Powell River, BC V8A 4L6
(604) 413-4116

Wooly Goodness
Quesnel, BC V2J 3A1
(250) 983-3536

In Sheep's Clothing
Sidney, BC V8L 2W9
(250) 656-2499

Valley Yarn Ltd.
Surrey, BC V4N 6K2
(604) 318-1405
valleyyarn.com

Pretty Good Ideas Ltd
New Westminster, BC V3L 5N7
(604) 807-8865

Three Bags Full Knit Shop
Vancouver, BC V5V 3R3
(604) 874-9665
threebagsfull.ca

Urban Yarns
Vancouver, BC V6R 2H8
(604) 228-1122
urbanyarns.com

A Twist of Yarn
Vernon, BC V1T 5J7
(250) 549-4200
atwistofyarn.com

Beehive Wool Shop
Victoria, BC V8W 2G7
(250) 385-2727
beehivewoolshop.com

MANITOBA

Wolseley Wool
Winnipeg, MB R3G 1B4
(204) 772 4658
wolseleywool.com

NEW BRUNSWICK

Cricket Cove
Blacks Harbour, NB E5H 1E6
(506) 456-3897
cricketcove.com

NOVA SCOTIA

Wools on the Corner
Bridgetown, NS B0S 1C0
(902) 665 5142

The Loop
Halifax, NS B3S 1Z7
(902) 429-5667
theloophalifax.ca

Zawesome Design House
Kingston, NS B0P 1R0
(306) 807 7447

Have a Yarn, Ltd
Mahone Bay, NS B0J 2E0
(902) 624-0569
haveayarn.ca

Gaspereau Valley Fibres
Wolfville, NS B4P 2N5
(902) 542-2656
gaspereauvalleyfibres.com

ONTARIO

The Needle Emporium
Ancaster, ON L9G 2C3
(905) 648-1994
needleemporium.com

True North Yarn
Barrie, ON L4N 5R7
(705) 737-4422
truenorthyarn.com

Nancy's Fibre Art Shop
Beamsville ON L0R 1B0
(905) 401 4120

Grey Heron Natural Designs
Belleville, ON K8N 3A1
(613) 771-9222

Granny Birds Wool Shoppe
Bobcaygeon, ON K0M 1A0
(705) 731 7802
grannybirdswoolshoppe.ca

The Purple Sock
Coldwater, ON L0K 1E0
(705) 686-3455

All Strung Out
Guelph, ON N1H 2T4
(226) 820-3766
allstrungoutyarns.ca

JanKnits Studio
Haliburton, ON K0M 1S0
(705) 457-4000
janknitsstudio.com

Purlin' J's Roving Yarn Co.
Kingston area, ON
info@purlinjs.ca
purlinjs.ca

Aberdeen's Wool Company
Lindsay, ON K9V 2Z2
(705) 928-5417
aberdeenswool.ca

Finery Hand Knitting Yarn
Markham, ON L3R 2Z5
(905) 752-0895

Sue2Knits
McGregor, ON N0R 1J0
(519) 726 4226
sue2knits.com

Serenity Knits
Newmarket, ON L3X 2M2
(905) 710-3283
serenityknits.ca

Unwind Yarn House
Newmarket, ON L3Y 3Z5
(905) 954-1153
unwindyarnhouse.com

Pitanga Yarns
Oakville, ON L6M 0G4
(416) 625-6301
pitangayarns.com

Spun Fibre Arts
Oakville, ON L6L 1H8
spunfibrearts.com

Linda's Craftique
Orangeville, ON L9W 6V3
(905) 274-4115
lindascraftique.com

Soper Creek Yarn
Orono, ON L0B 1M0
(905) 983-5553
sopercreekyarn.ca

The Wool Queen
Oshawa, ON L1H 4H1
(905) 725-8543
thewoolqueen.ca

Wabi Sabi
Ottawa, ON K1Y 3N7
(613) 725-5648
wabi-sabi.ca

Wool-Tyme
Ottawa, ON K2E 7K3
(613) 225-9665
wool-tyme.com

Never Enough Wool
Port Perry, ON L9L 1J1
(905) 985-0030

Little Red Mitten
St. Thomas, ON N5P 1A5
(519) 207-2880
littleredmitten.ca

Feather Your Nest
Sarnia, ON N7T 5S3
(519) 336-1617

Creative Yarns
Scarborough, ON M1P 2X8
(416) 331-8085
creativeyarns.ca

The Wool and Silk Co.
Shelburne, ON L9V 3K9
(519) 925-6194
woolandsilkco.com

Passion Knit
Toronto, ON M4N 2M6
(416) 322-0688
passionknit.ca

Romni Wools
Toronto, ON M6J 1E5
(416) 703-0202
romniwools.com

The Knitting Loft
Toronto, ON M3K 1 E1
(647) 835 5809
theknittingloft.ca

The Wool Mill
Toronto, ON M4C 1K3
(416) 696-2670

The Yarn Guy
Toronto, ON M4B 1E3
(416) 752 1828
sewknit.ca

ARCHIVE INSPIRED

Follow Your Heart

INSPIRED BY OUR BLANKET, WE BRING YOU THIS EYE-CATCHING SCARF. WHAT'S NOT TO LOVE?

NORO Heart Blanket
Designer: Bonnie Franz
Pattern available at https://knittingfever.com/design/16042

IN ISSUE 5 WE PUBLISHED THE MEMORABLE HEART BLANKET. It was, unsurprisingly, a huge success. Designer Bonnie Franz used Kureyon, perhaps the most iconic Noro yarn, in three colorways. The Noro Design Team in Japan were so inspired, they used the chart to create this scarf, knit in two pieces and joined with a three-needle bind-off at the center back. Each side features three hearts, again knit in Kureyon, but in only two colors. Ribbed edges prevent rolling.❖

PHOTOGRAPHS BY JACK DEUTSCH.

JUNIPER MOON FARM

SUMMER SOLSTICE

luxurious linen and cotton tweed

KNITTINGFEVER.COM/STORE-LOCATOR